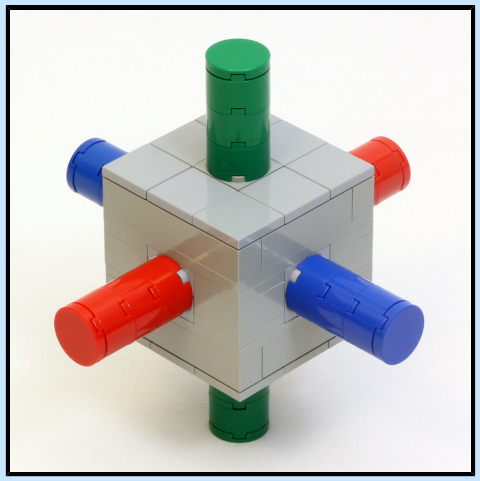

1802

Candy Catapult

388 pieces

A custom model design
by Jason Allemann

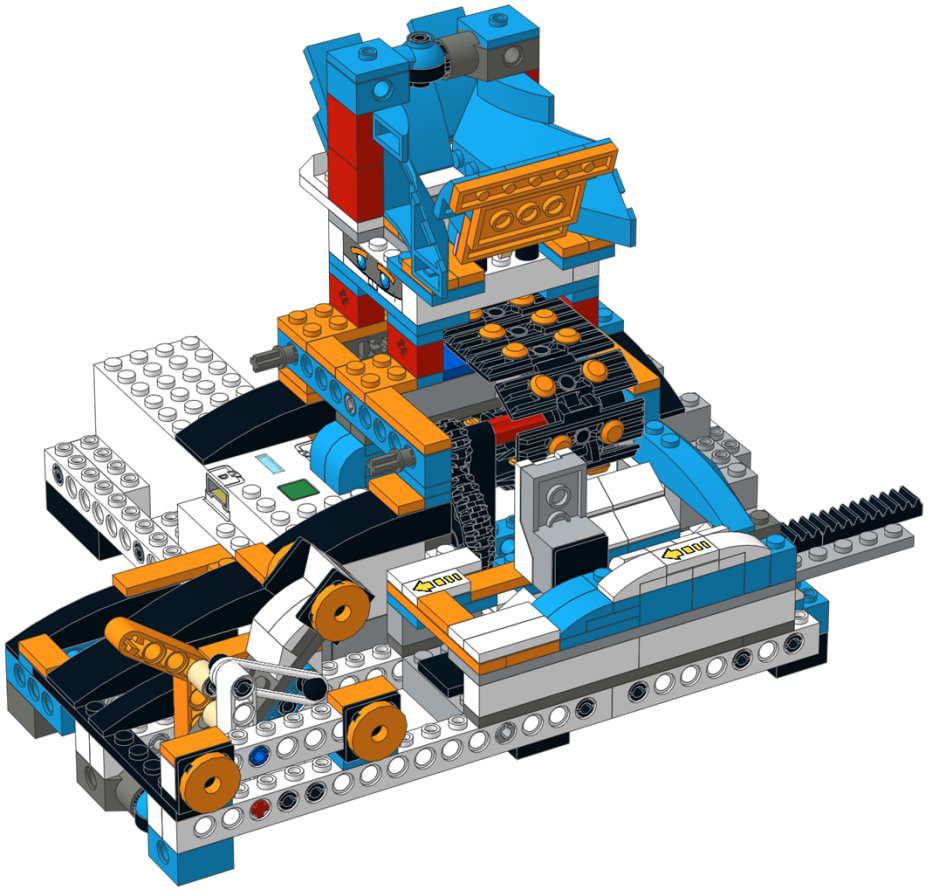

All the pieces needed to build this model are available in the LEGO BOOST set 17101 Creative Toolbox.

More information about building, programming and operating this model can be found at jkbrickworks.com

To see more of our custom models, visit *jkbrickworks.com*.

You can also find us at facebook.com/JKBrickworks or follow @jasonallemann on Twitter and Instagram.

© 2018 Jason Allemann

These instructions and the design depicted are made freely available for personal use, and are licensed under the *Creative Commons Attribution-NonCommercial 4.0 International License*.

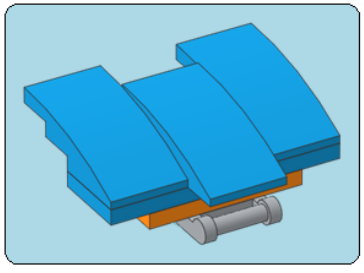

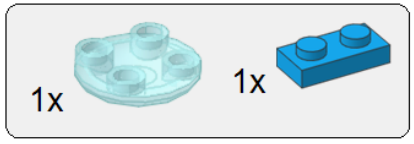

1

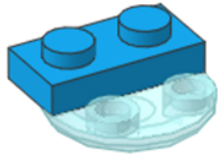

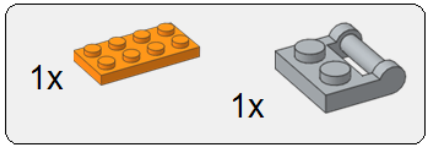

2

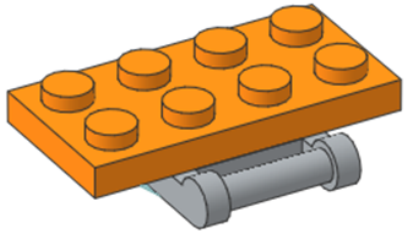

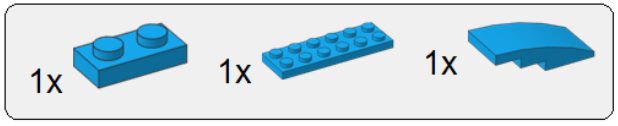

3

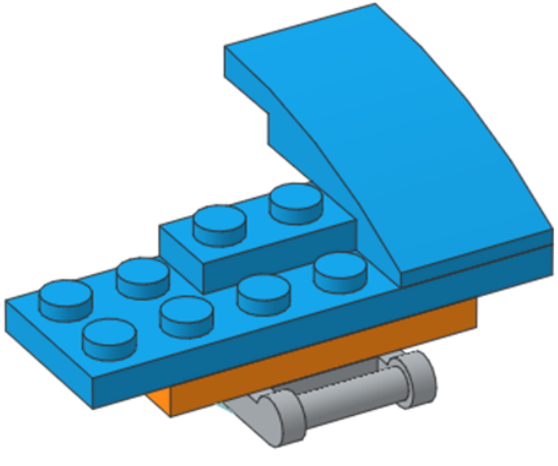

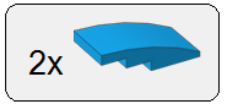

4

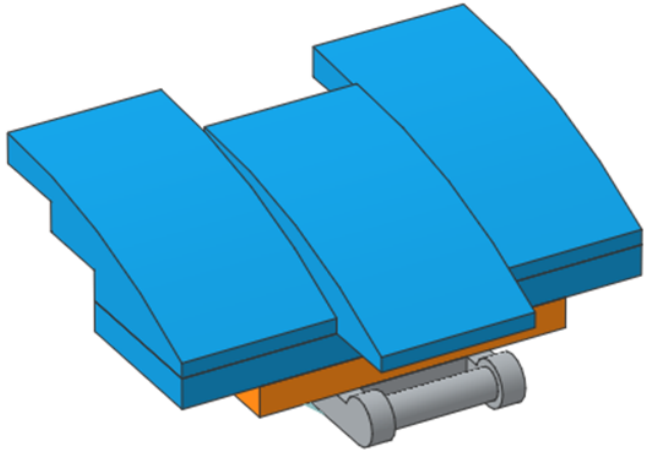

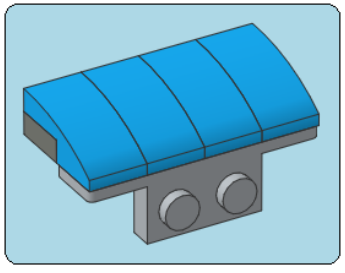

1x 2x

1

x2

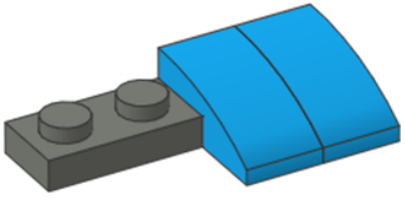

1x 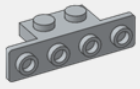 2x

2

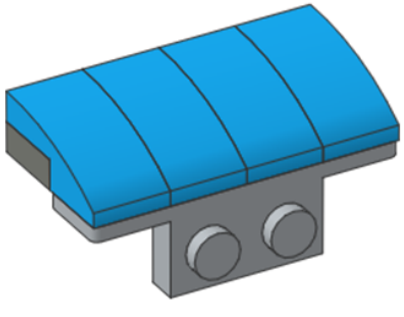

x2

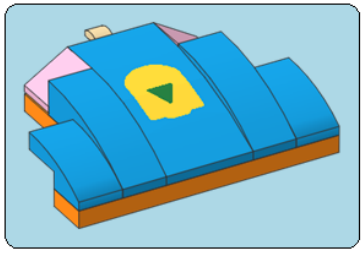

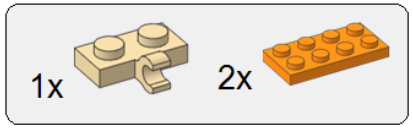

1

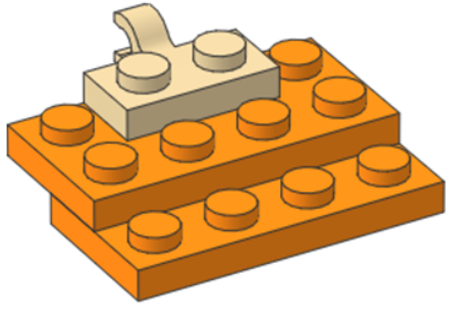

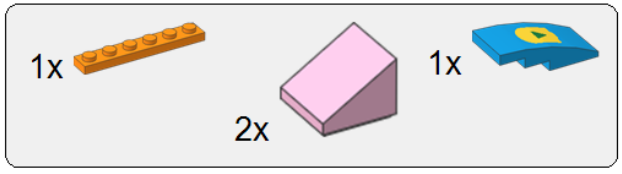

2

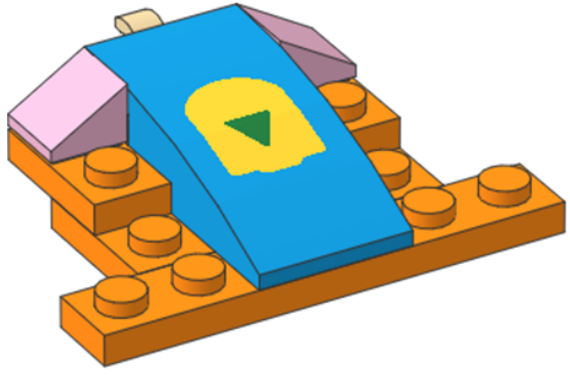

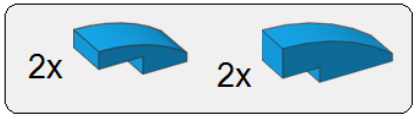

3

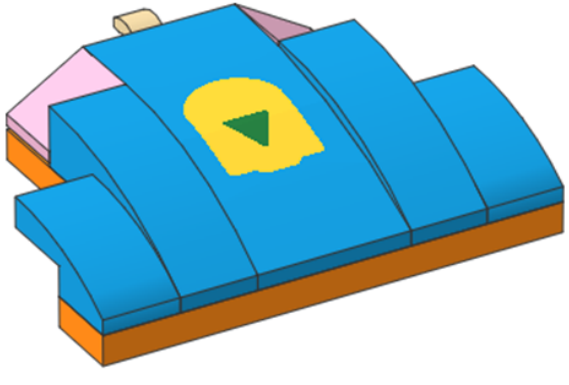

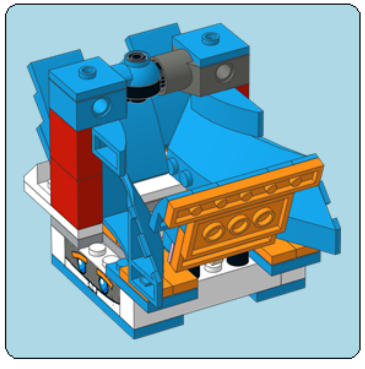

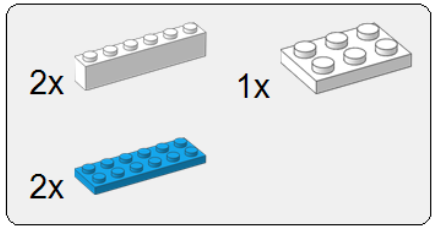

1

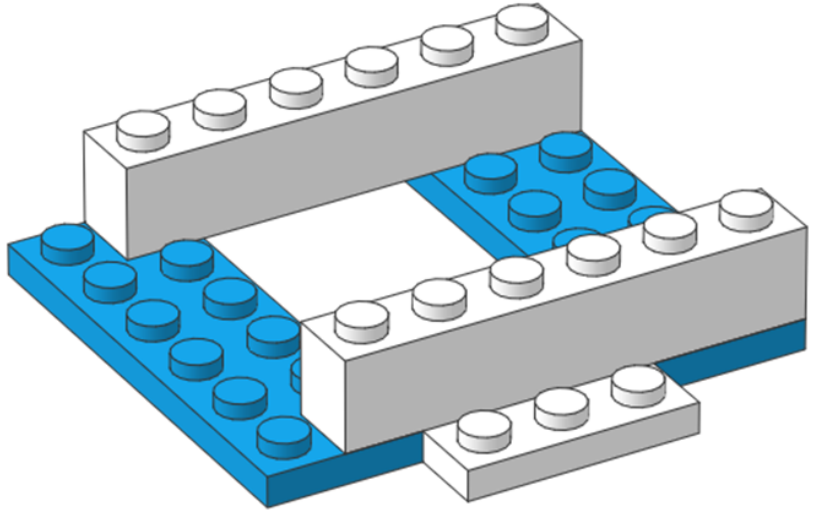

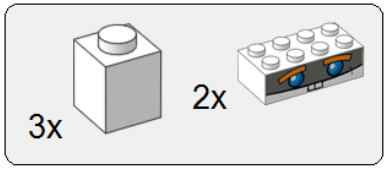

2

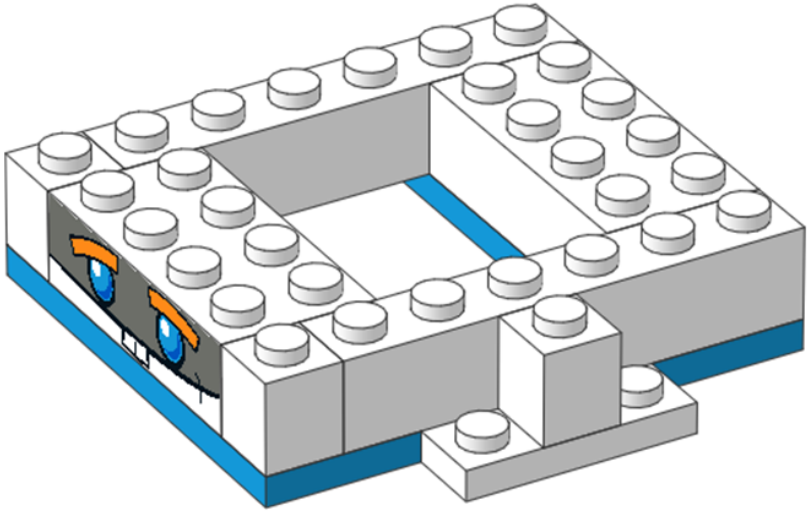

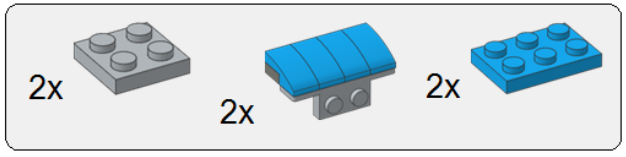

3

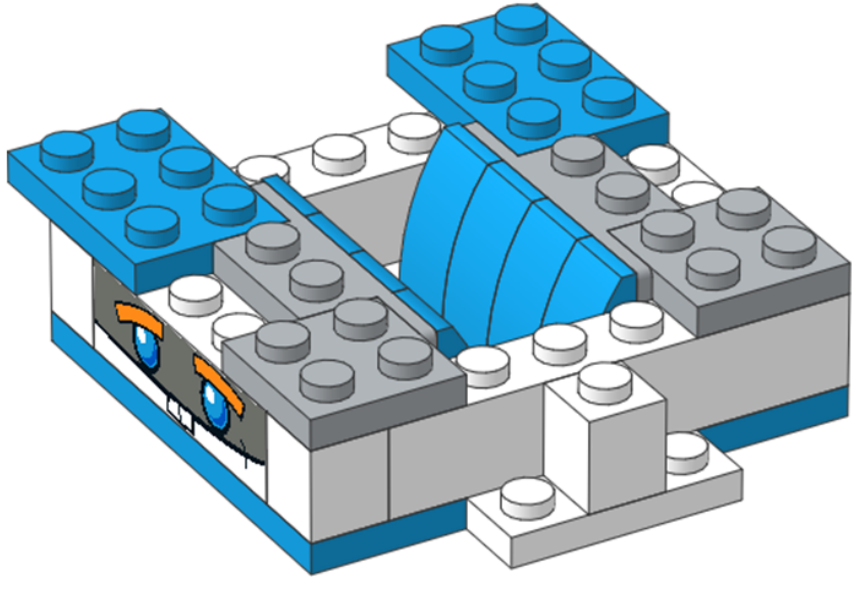

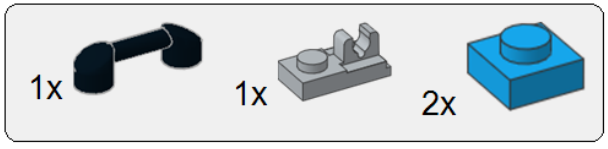

4

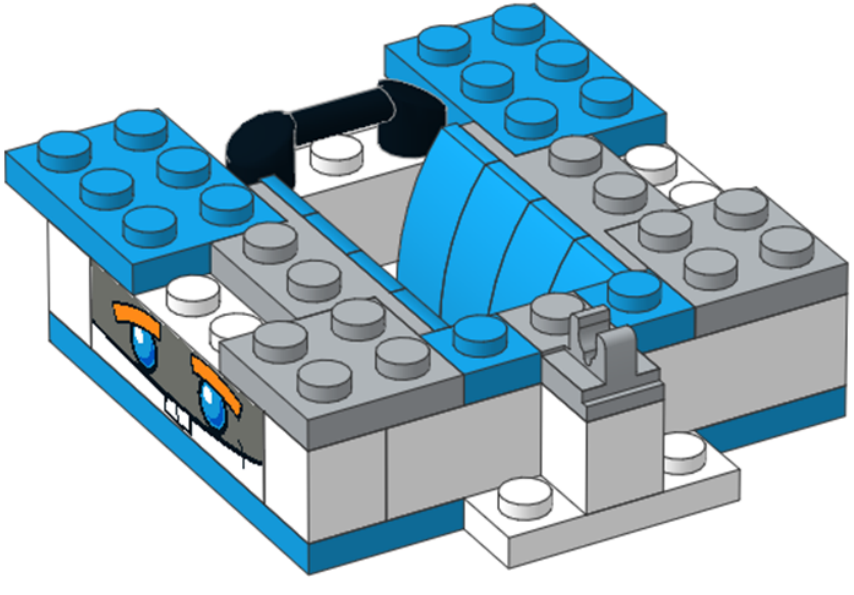

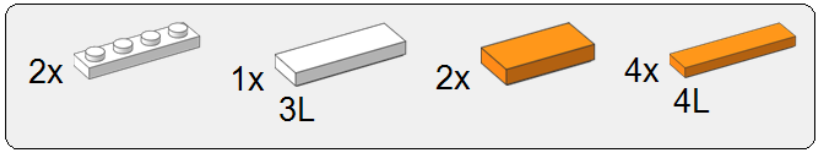

5

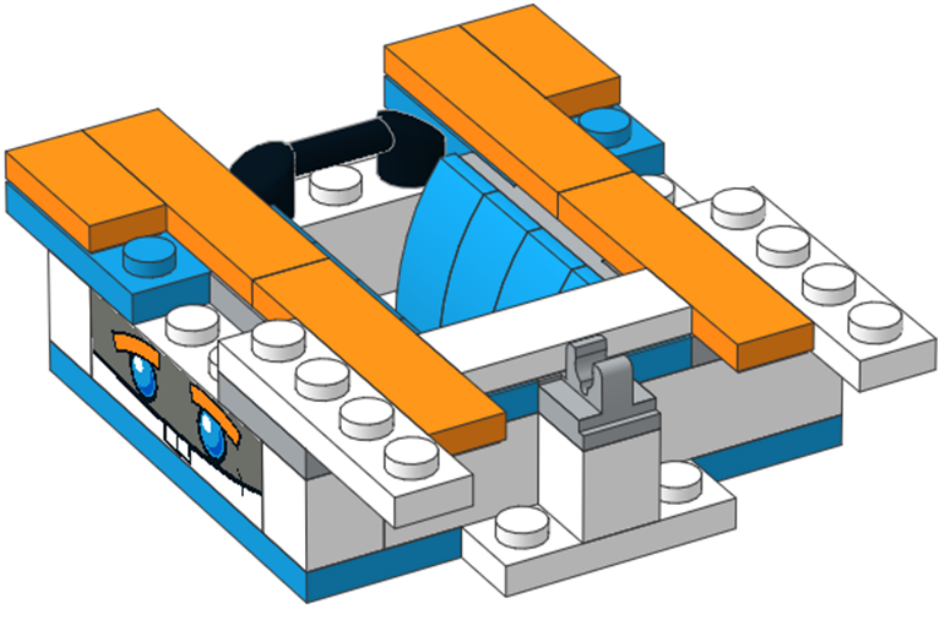

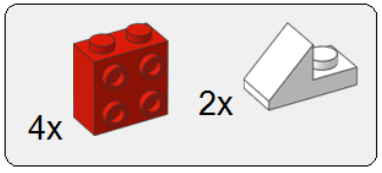

6

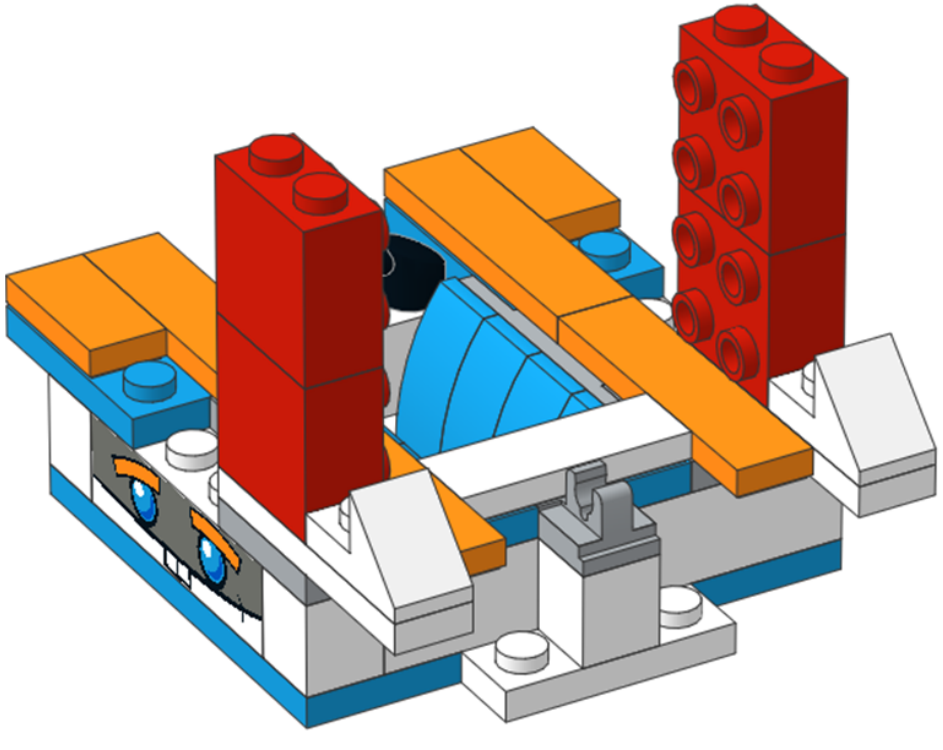

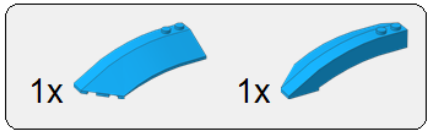

7

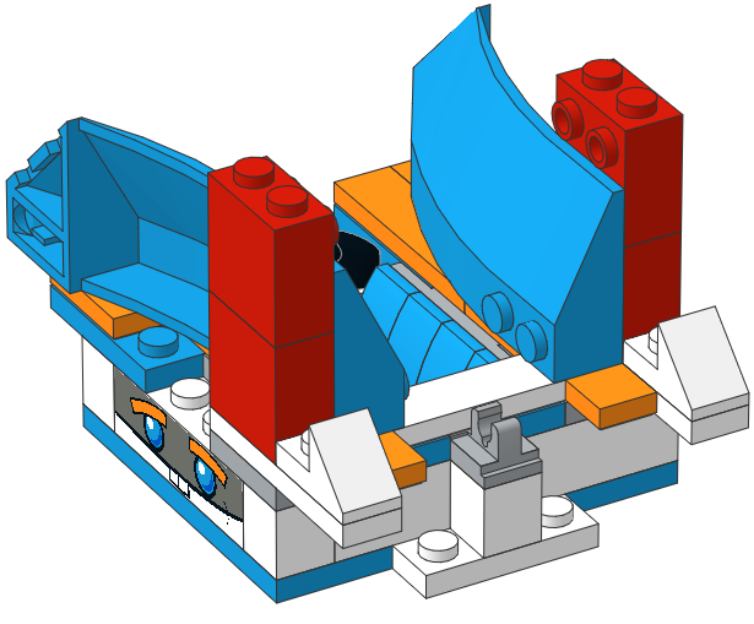

2x 2x

8

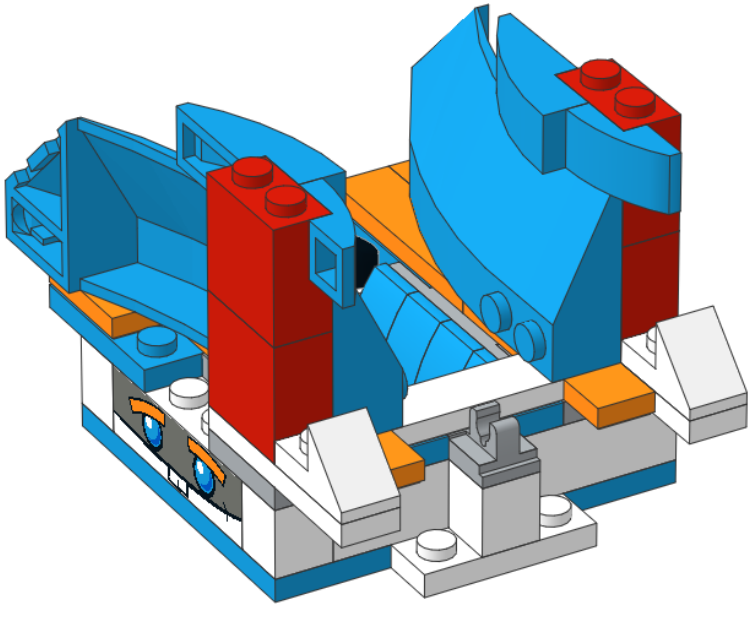

1x

9

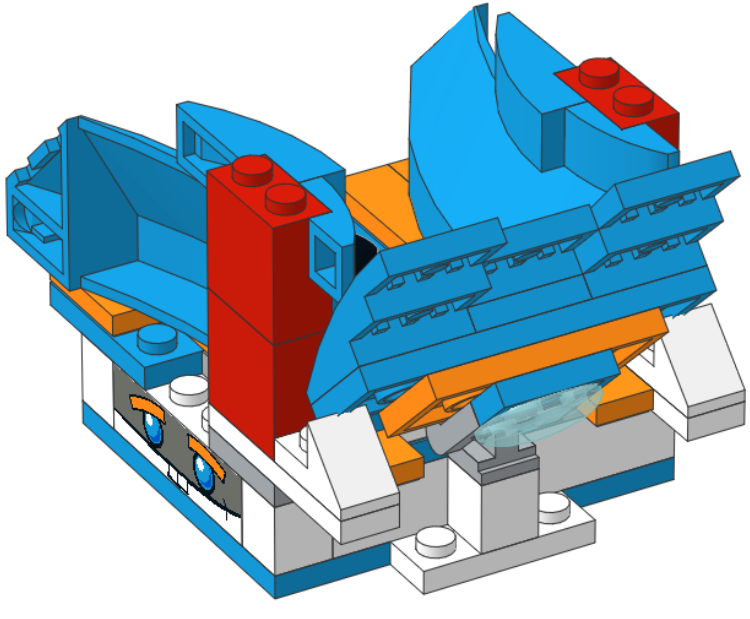

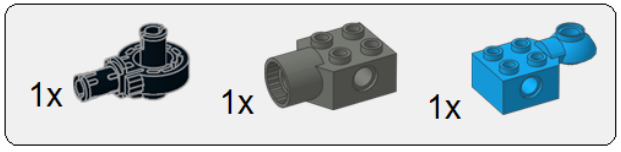

10

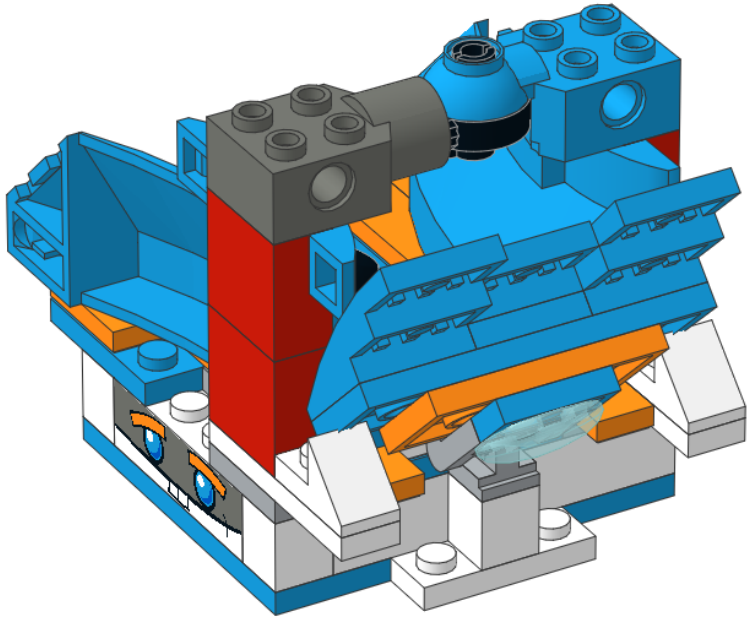

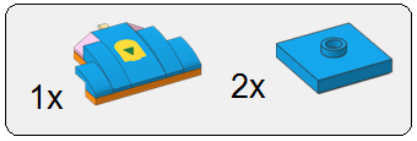

11

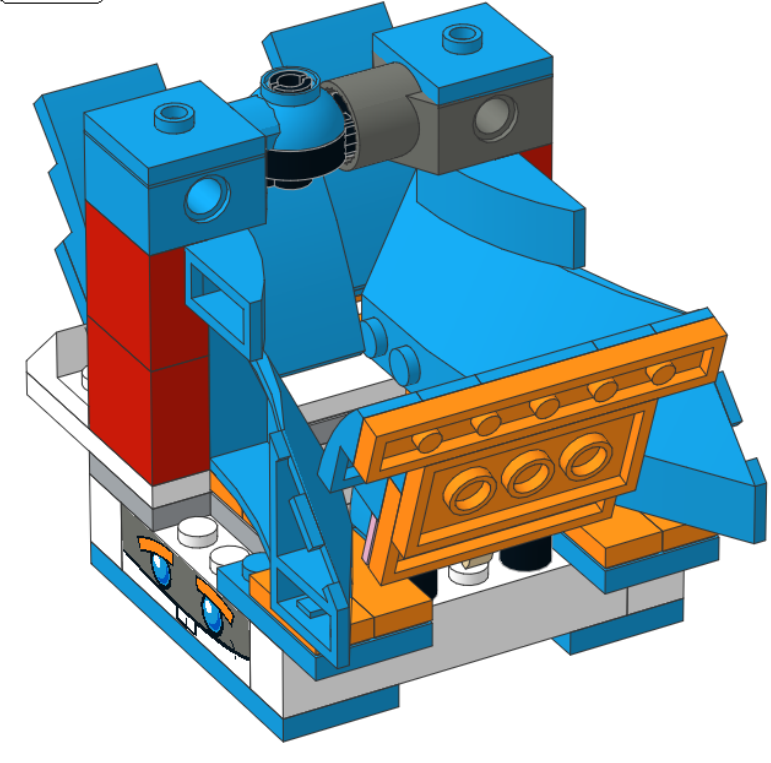

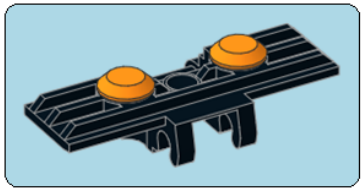

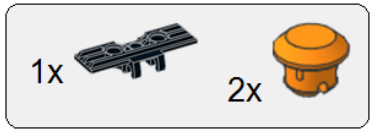

x17

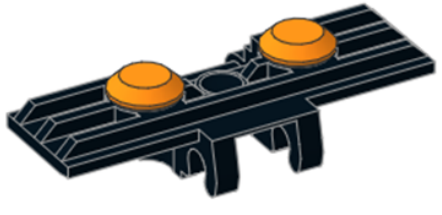

x17

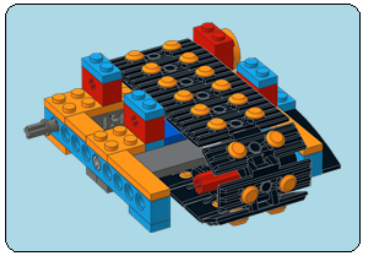

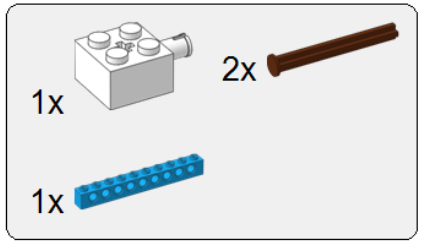

1

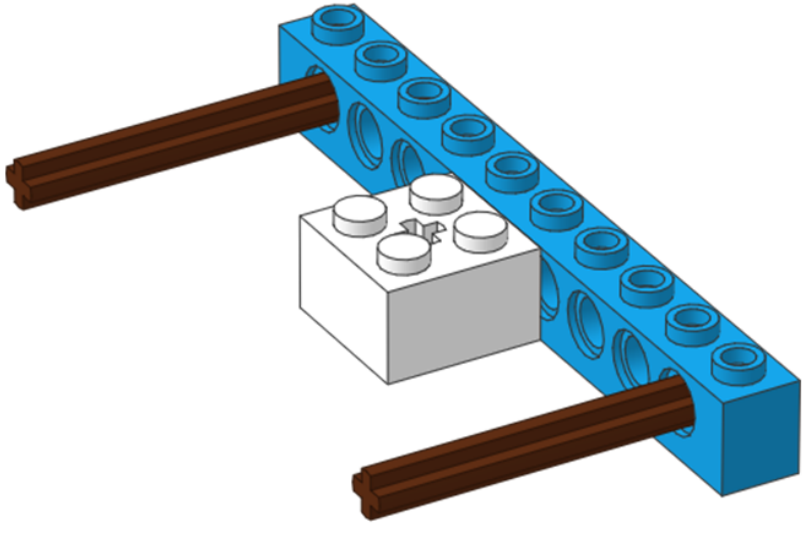

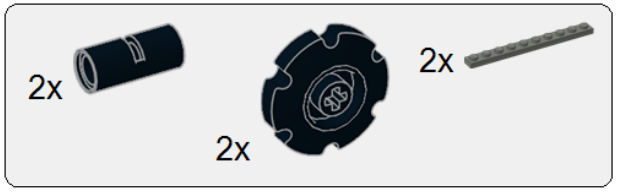

2

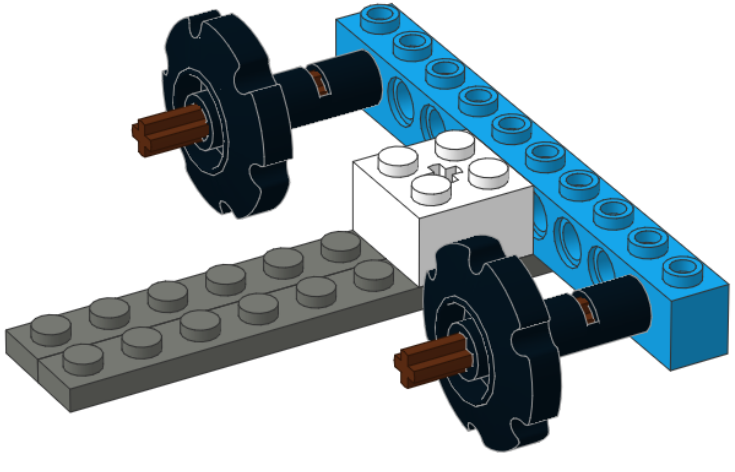

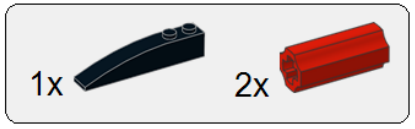

3

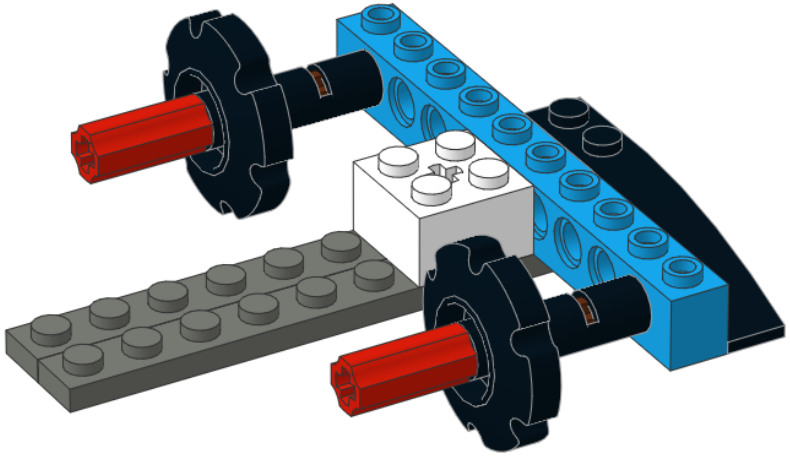

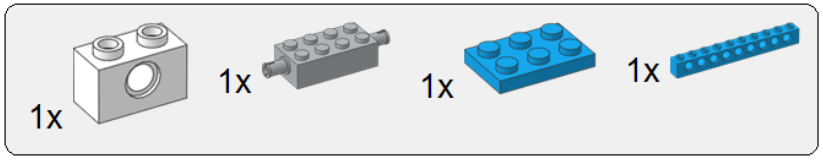

4

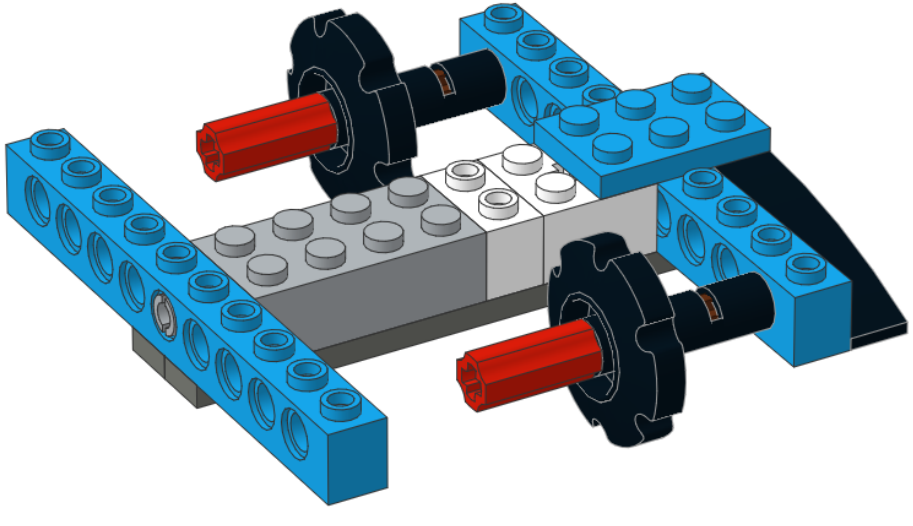

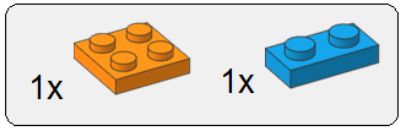

5

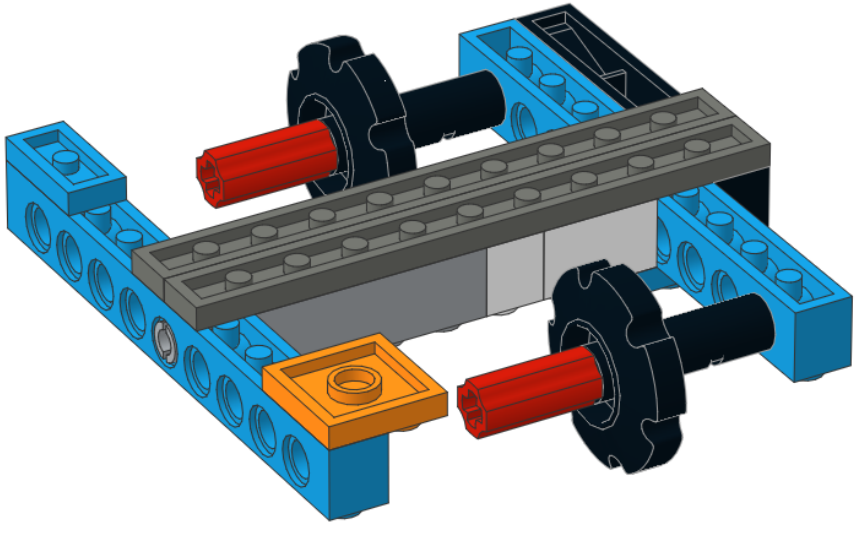

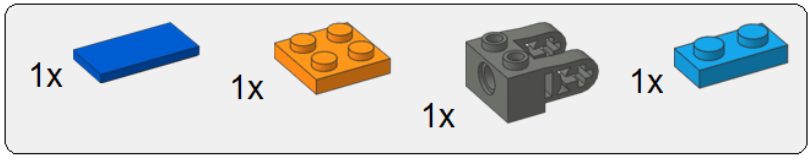

6

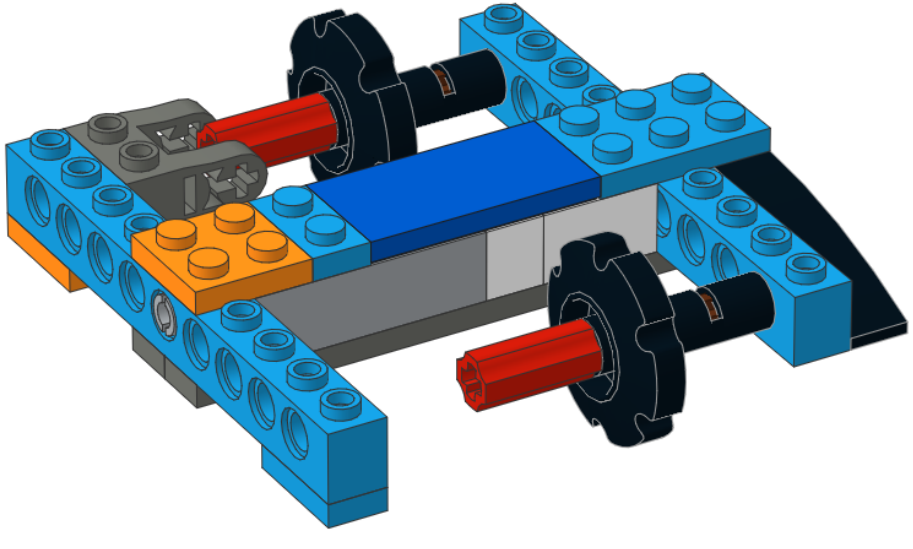

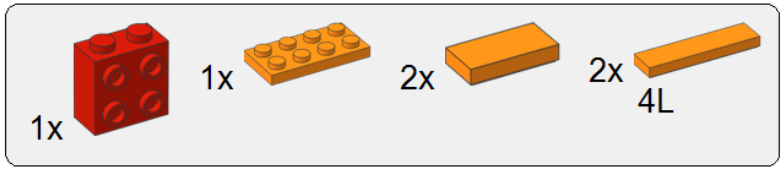

7

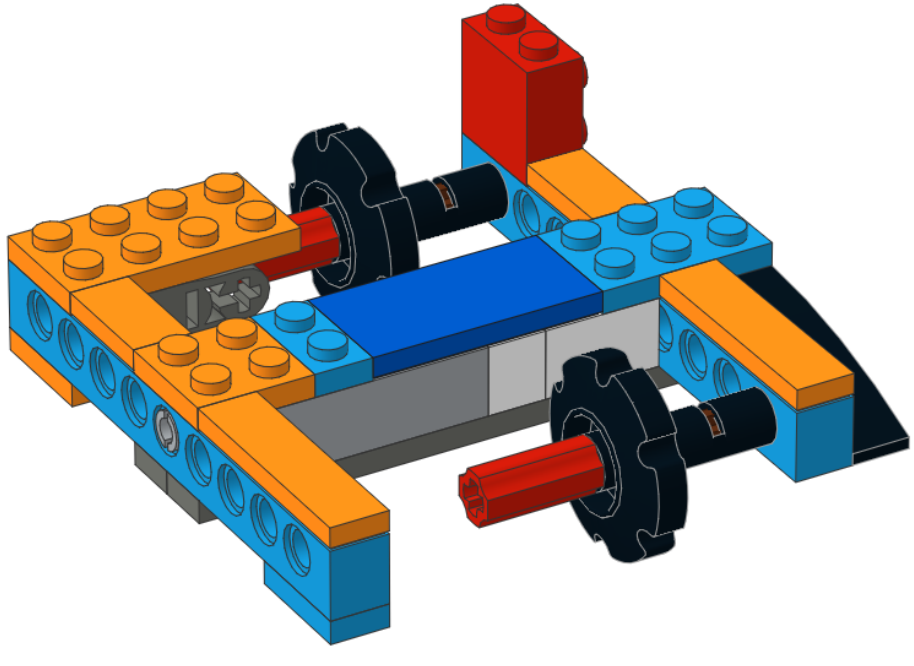

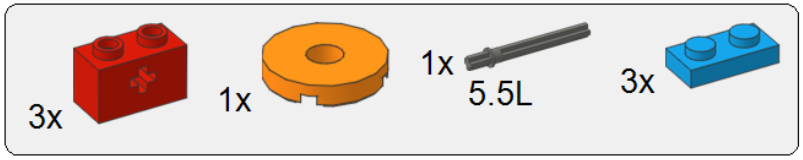

8

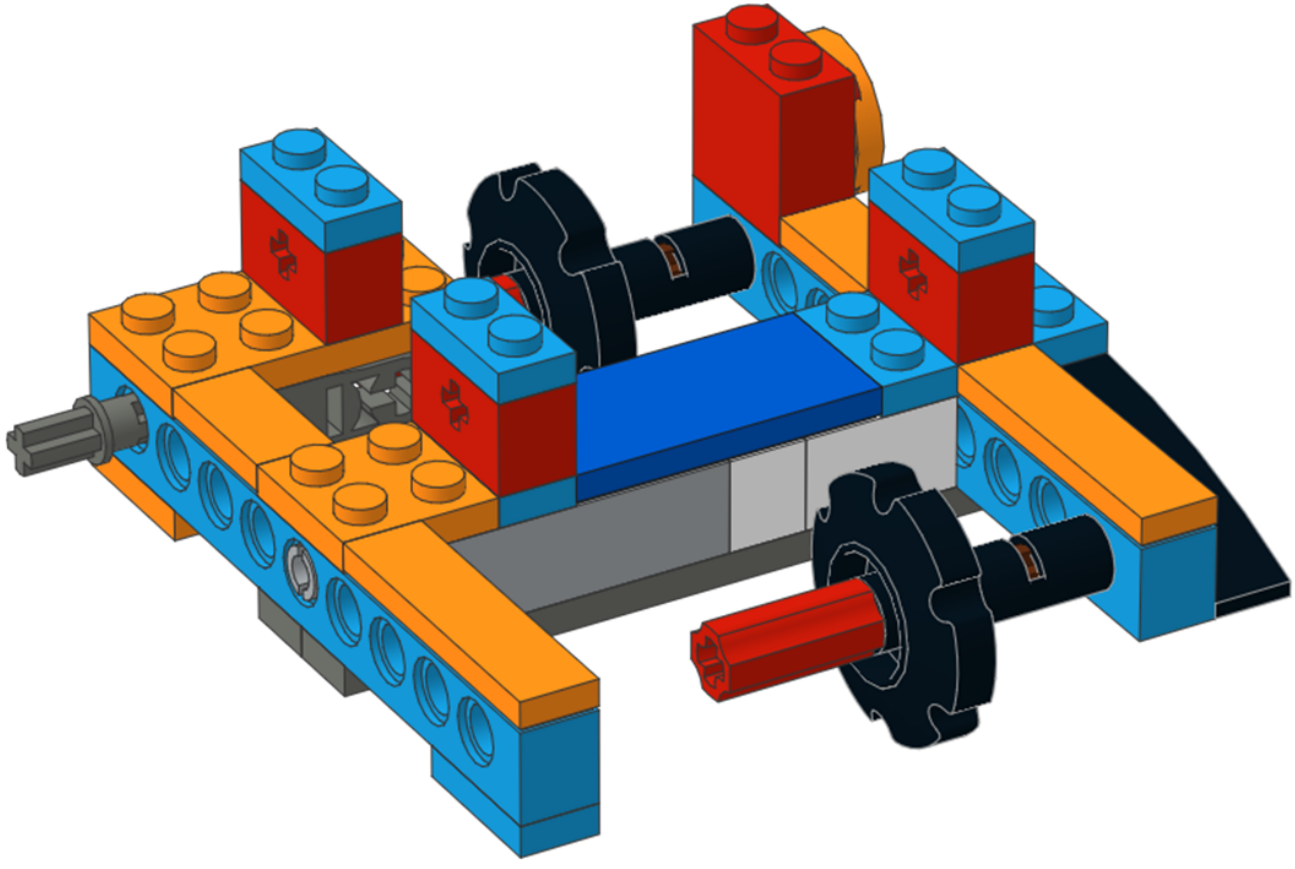

17x 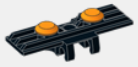

9

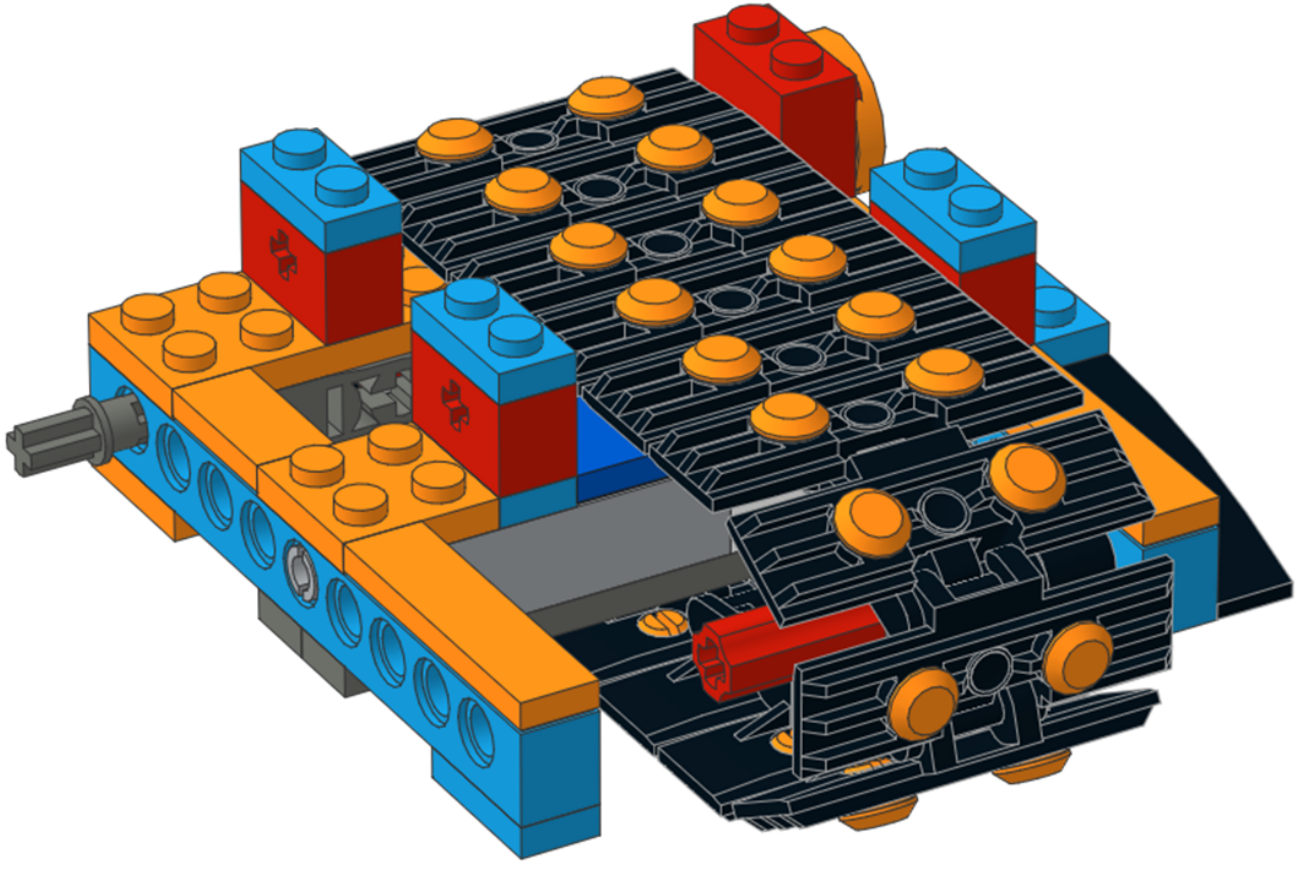

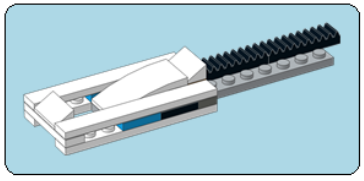

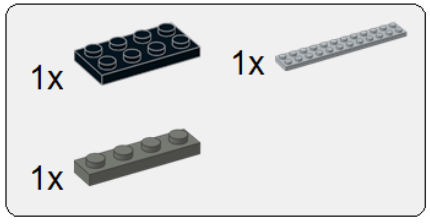

1

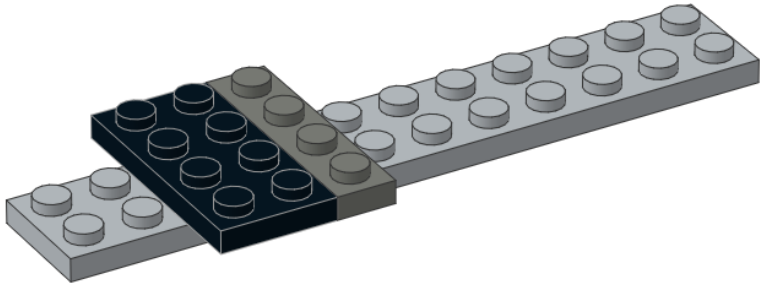

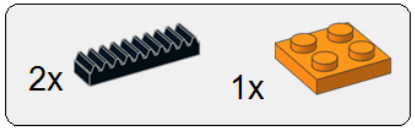

2

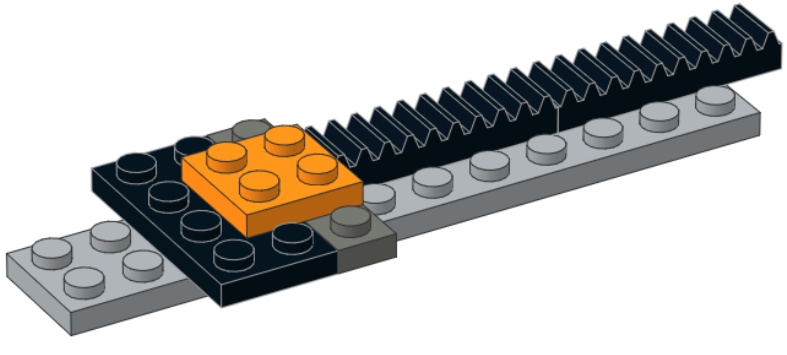

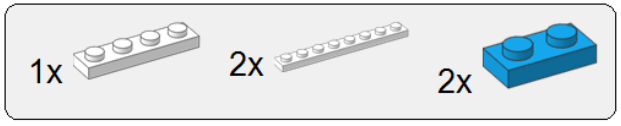

3

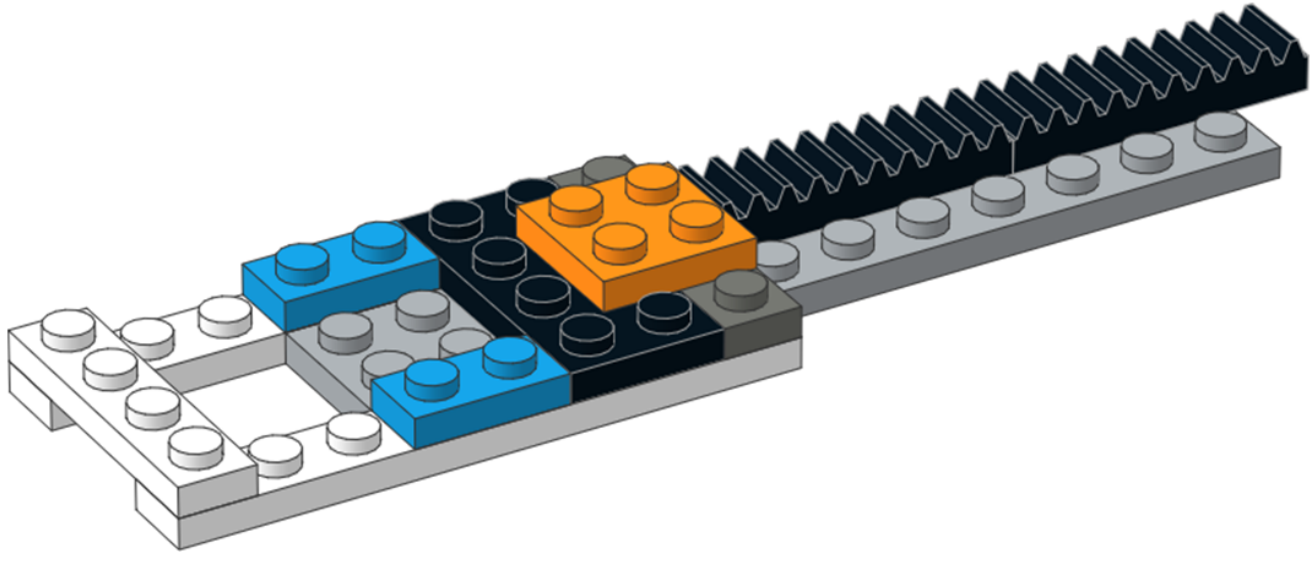

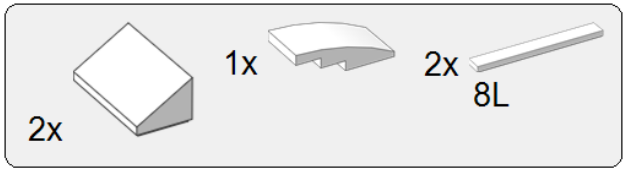

4

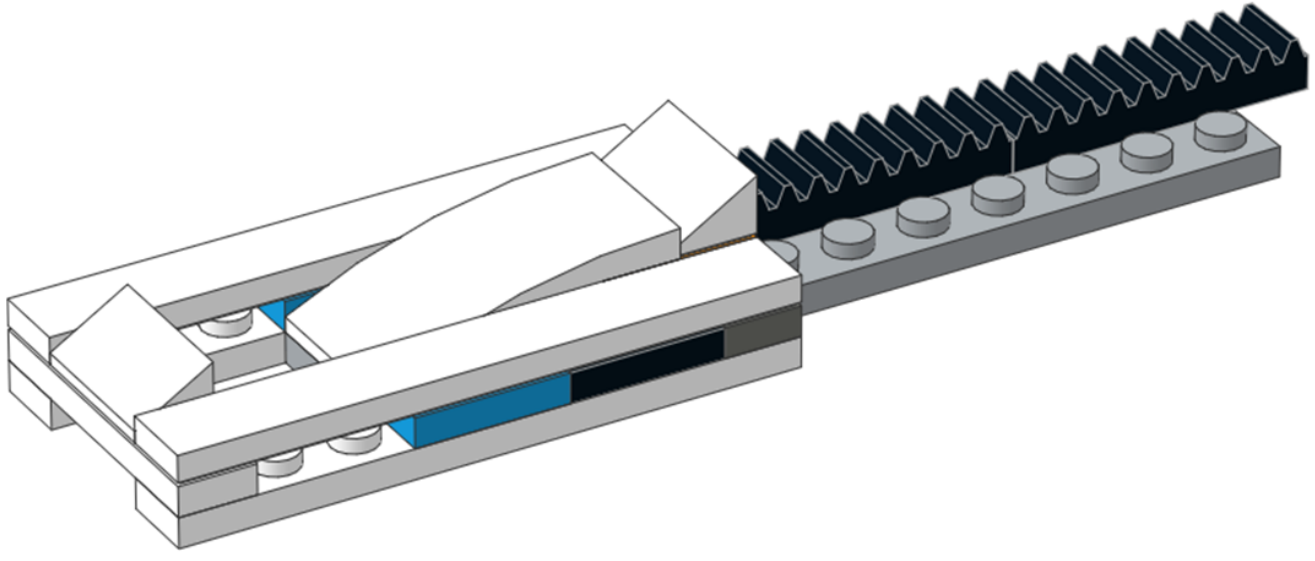

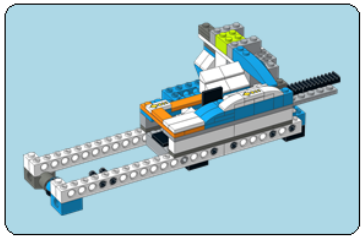

5x 2x 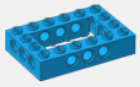

1

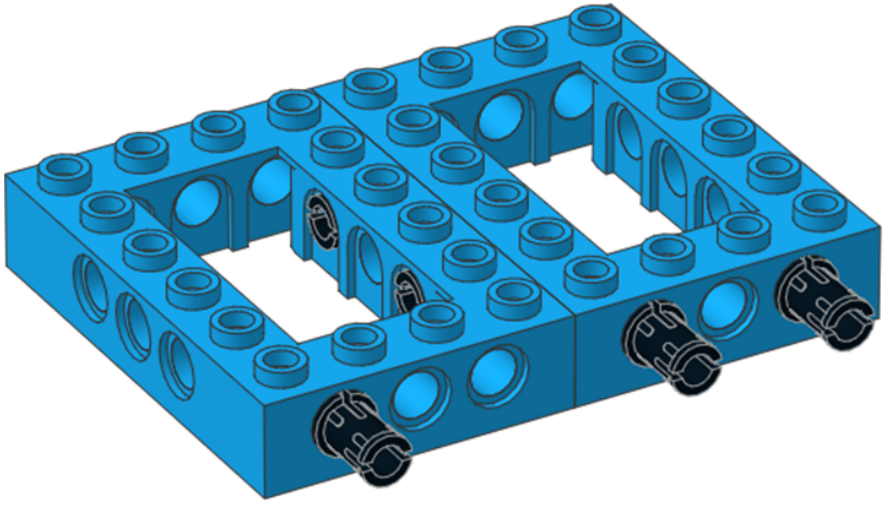

5x 2x 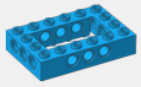

2

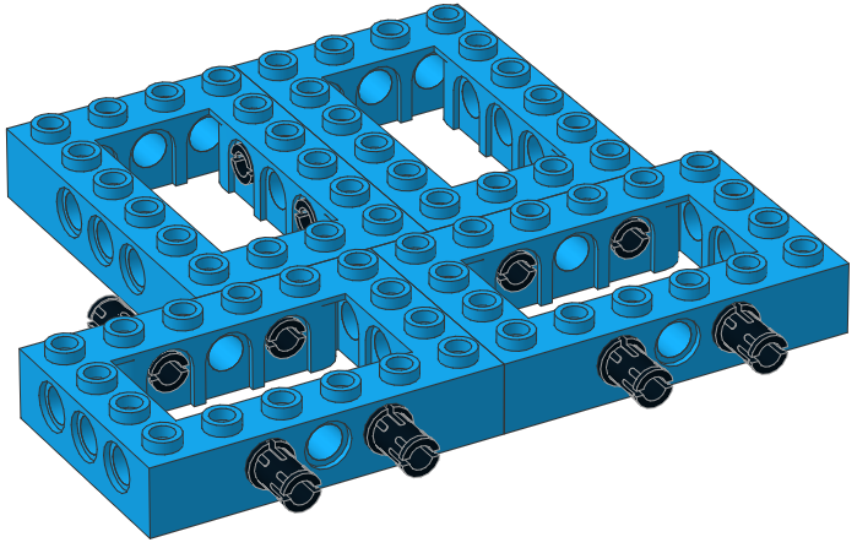

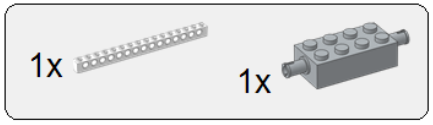

3

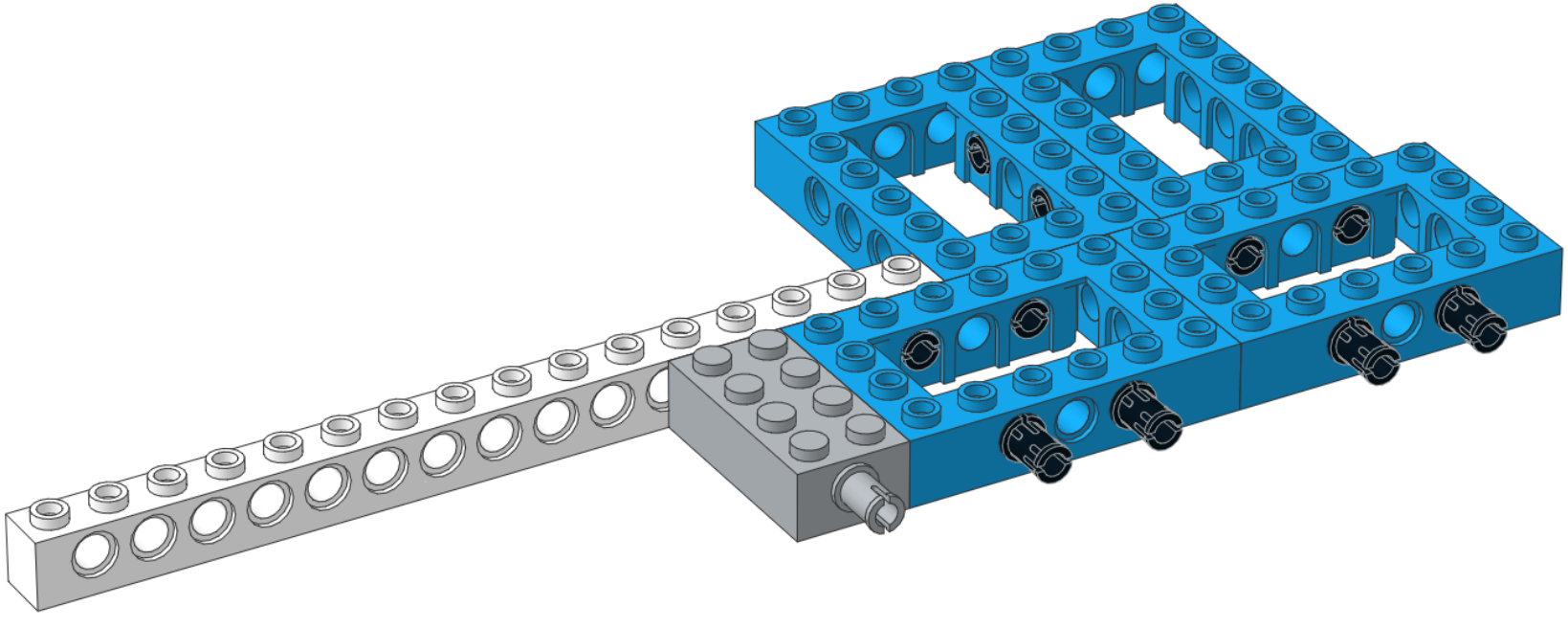

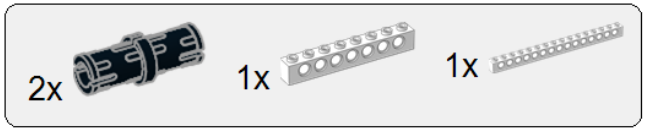

4

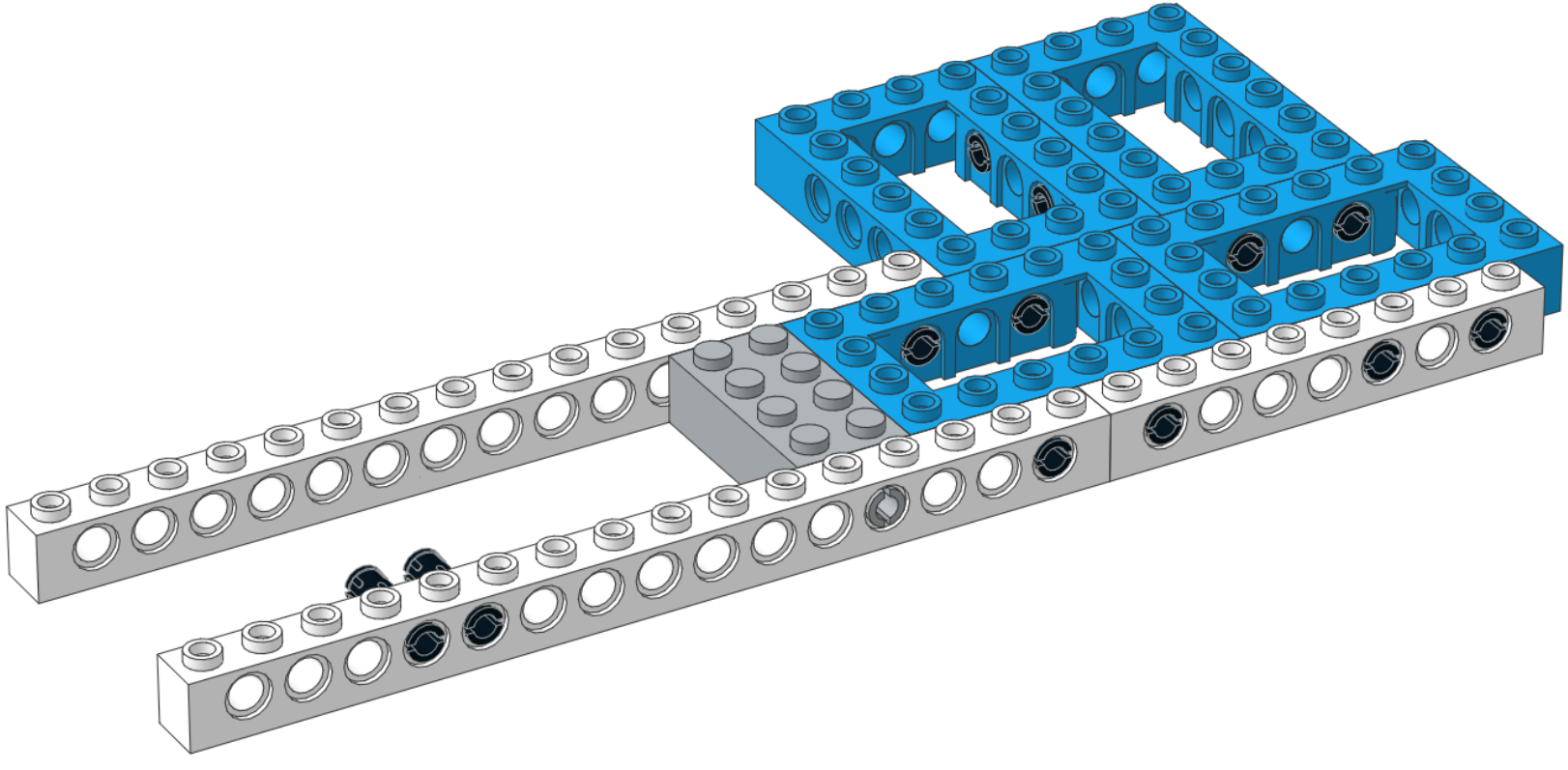

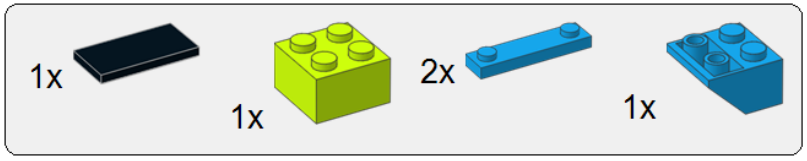

5

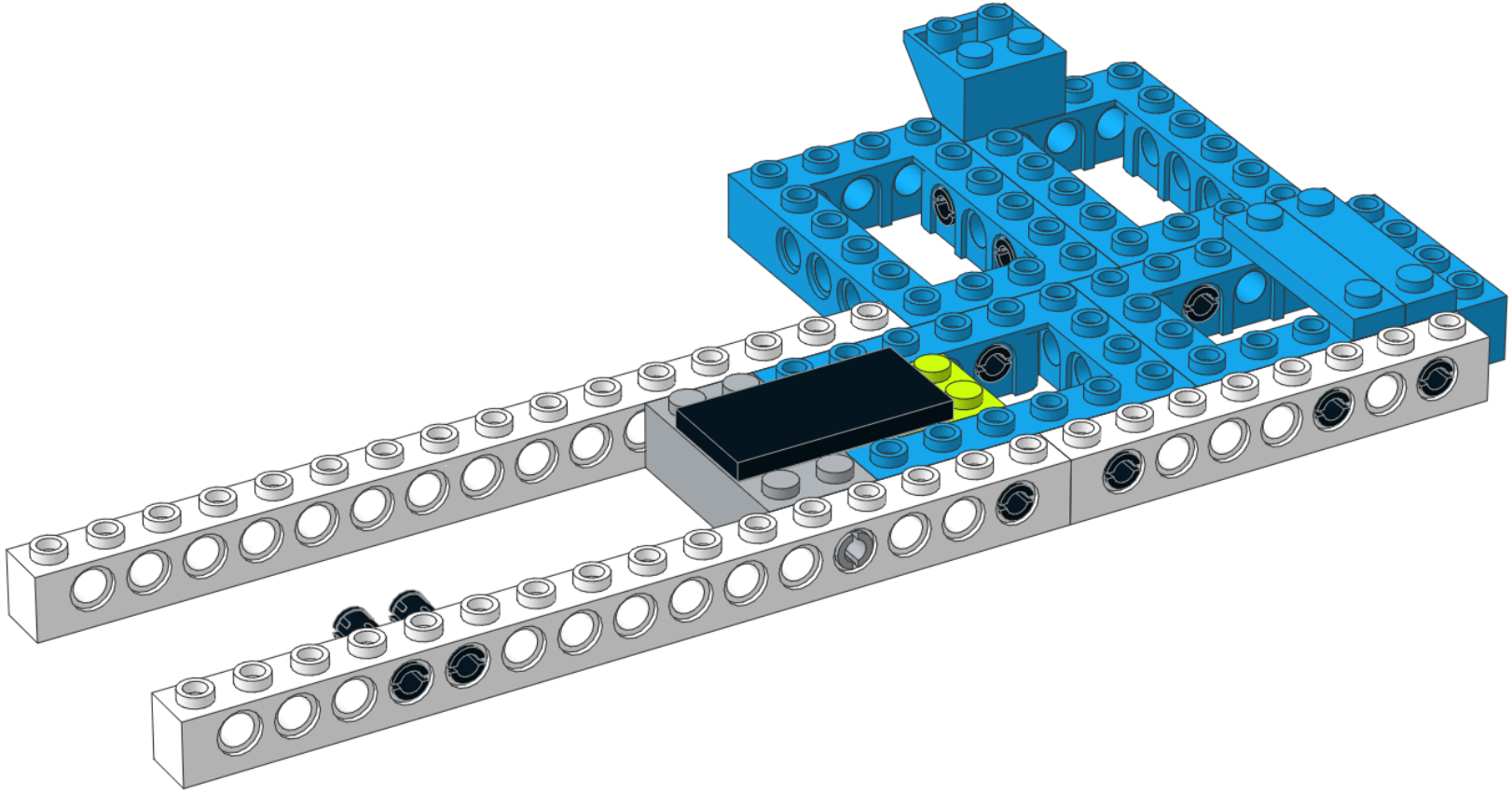

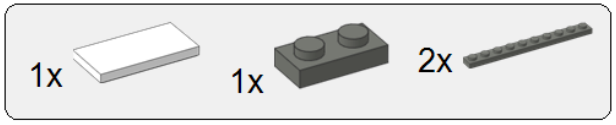

6

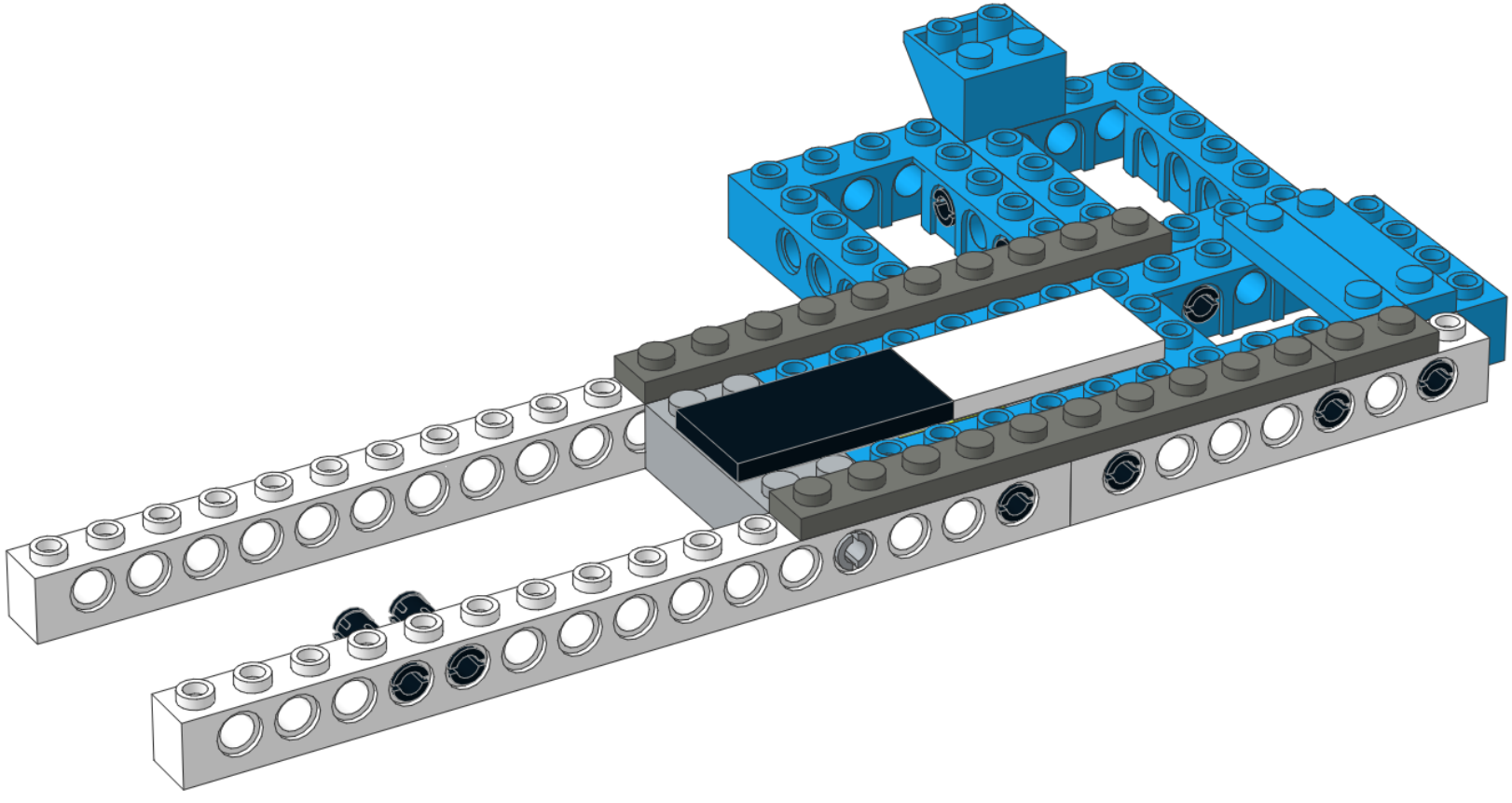

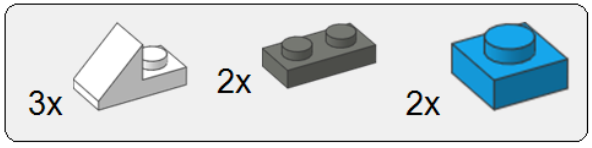

7

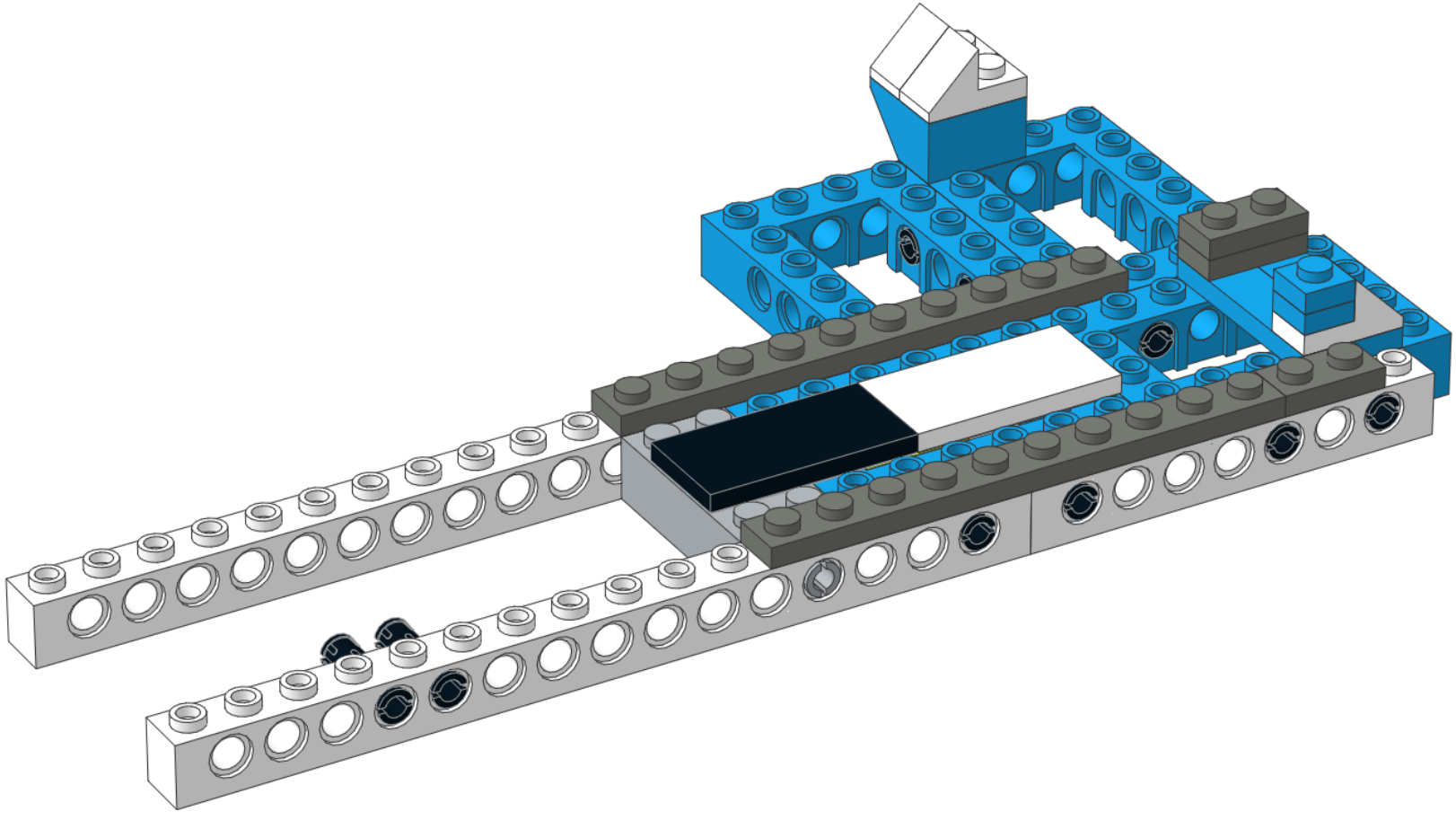

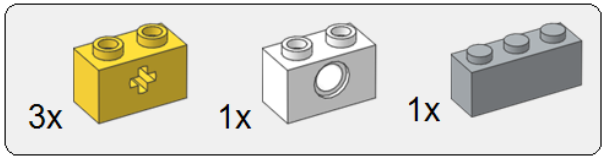

8

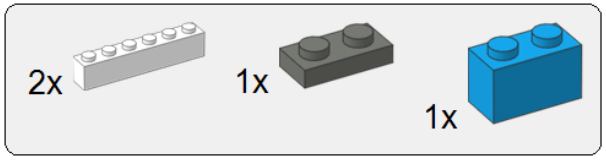

9

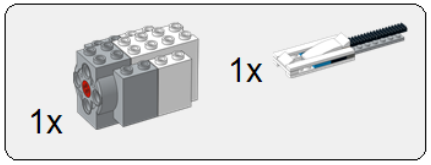

10

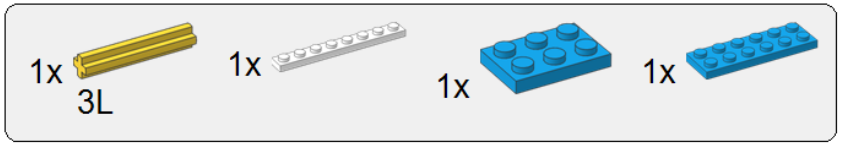

11

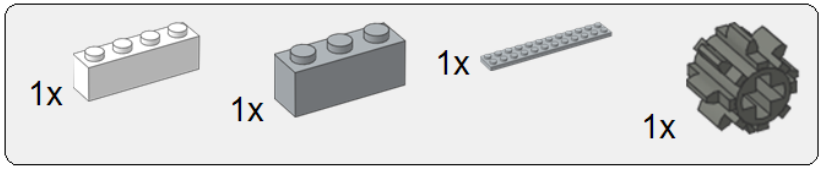

12

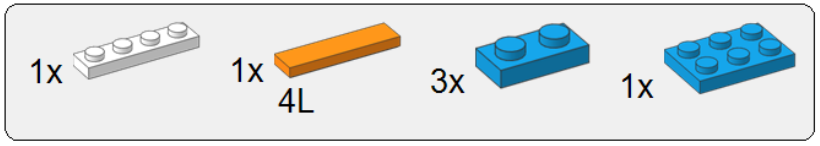

13

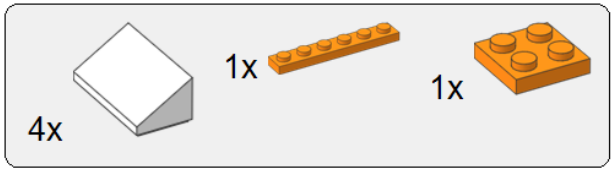

14

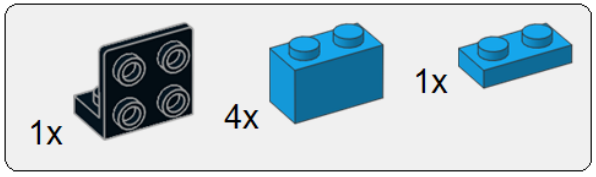

15

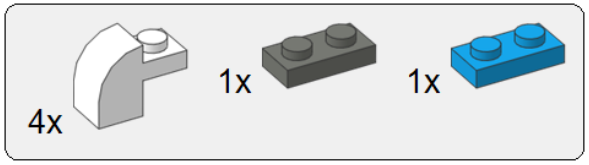

16

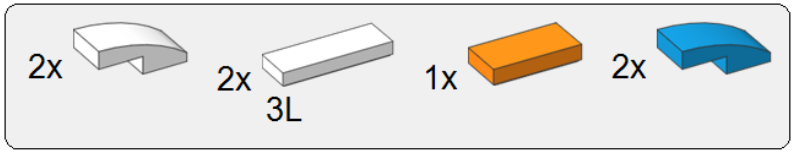

17

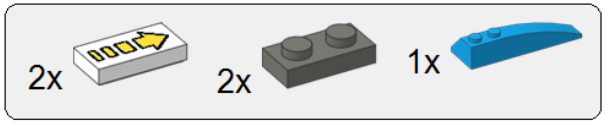

18

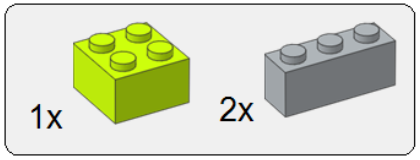

19

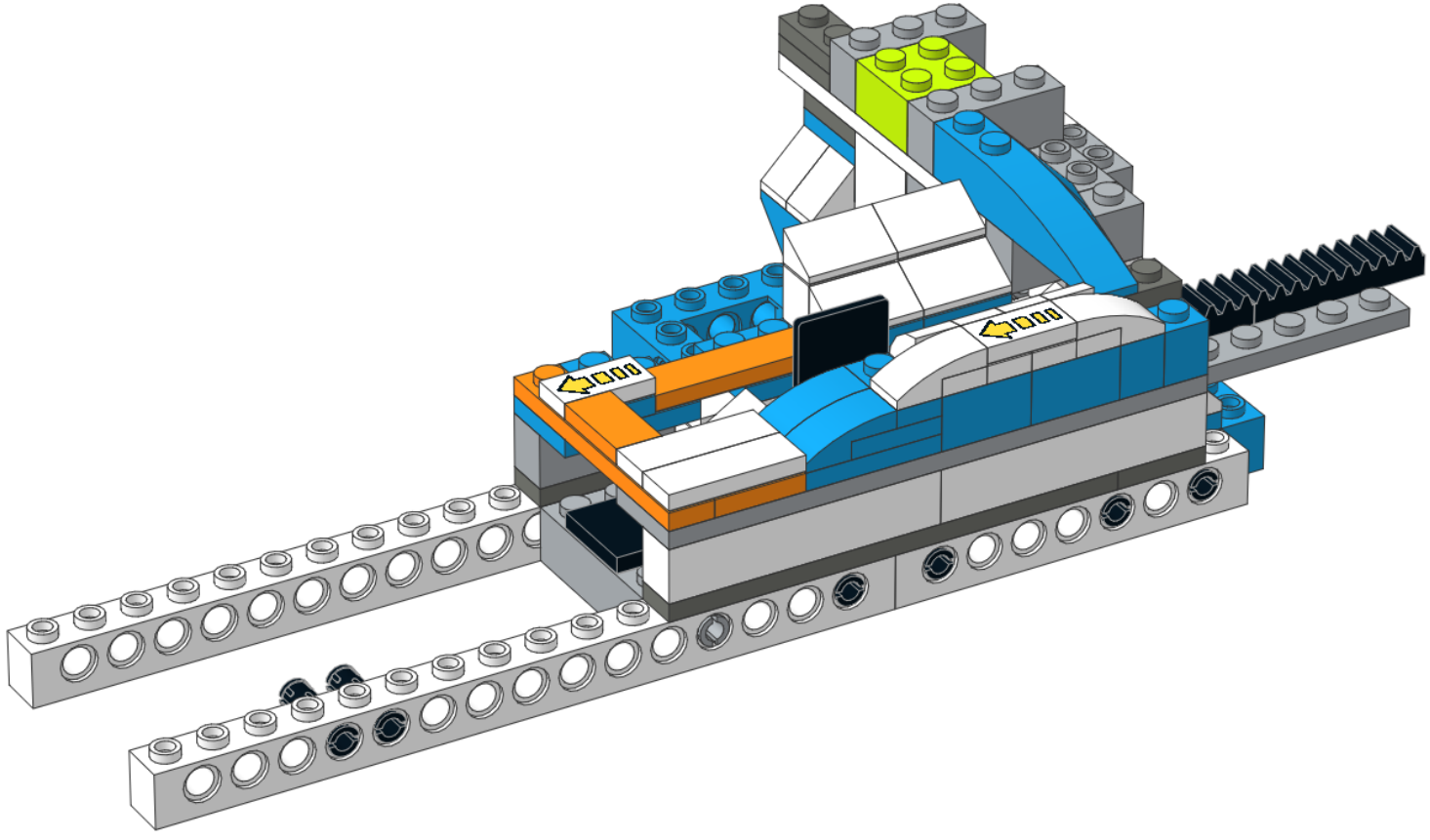

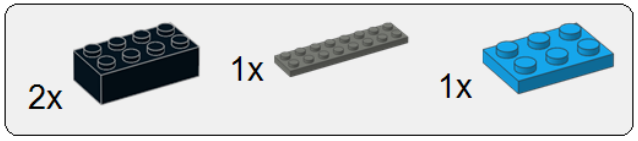

20

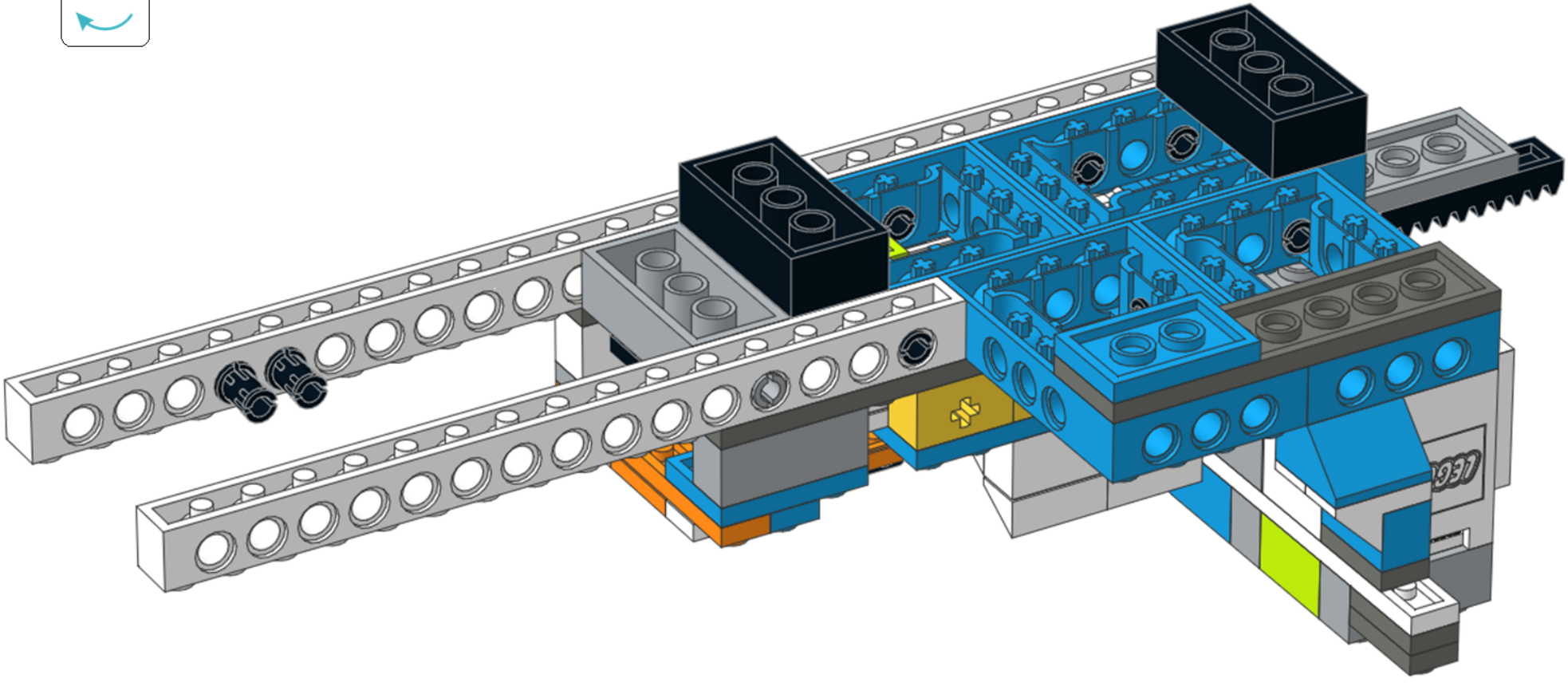

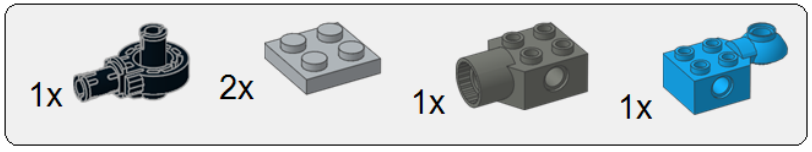

21

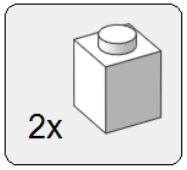

22

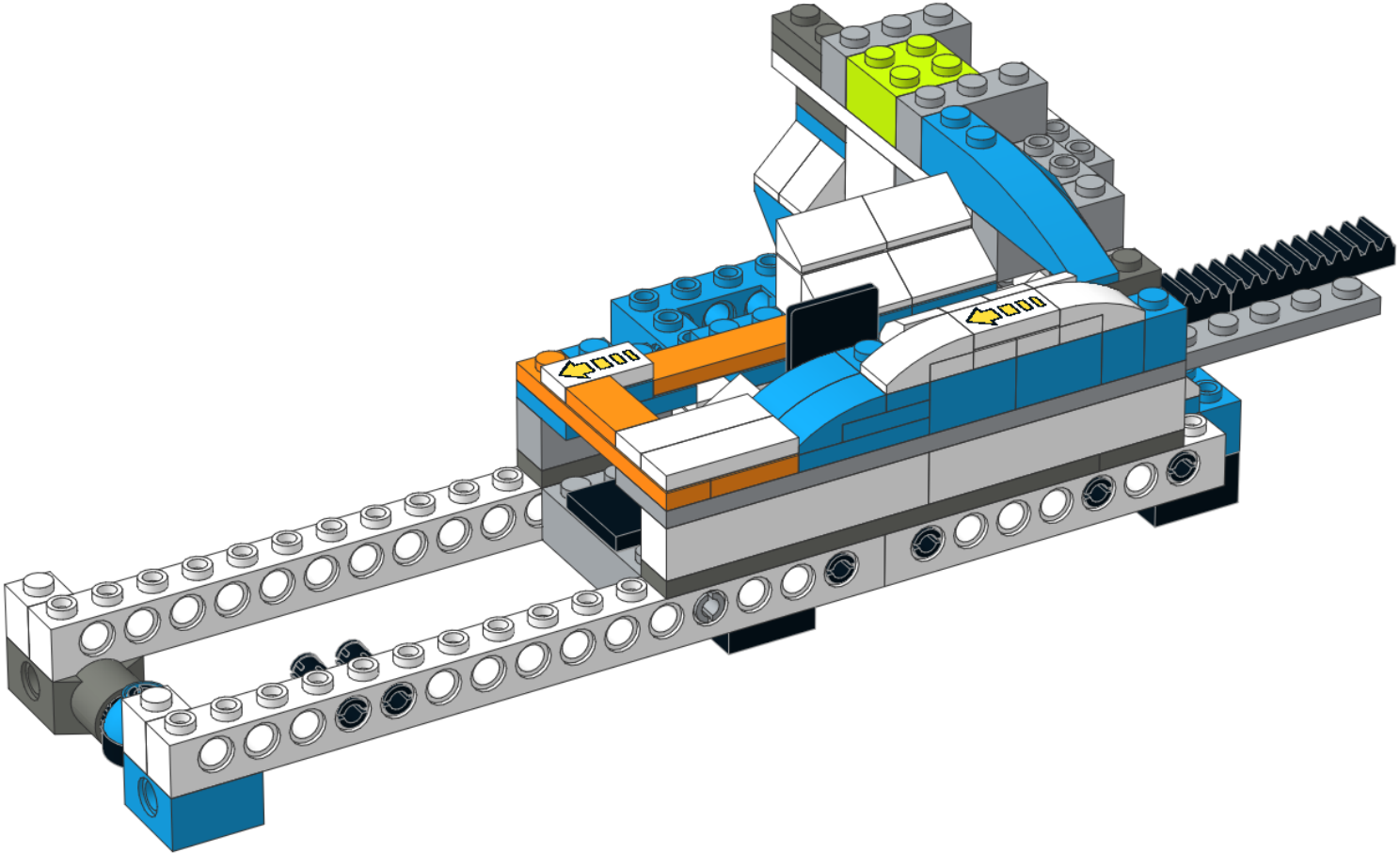

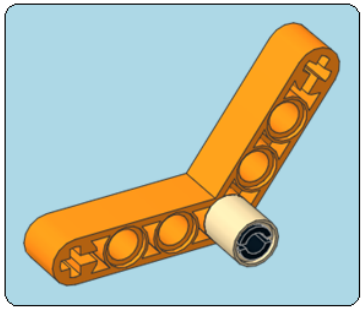

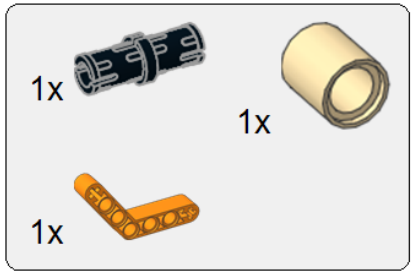

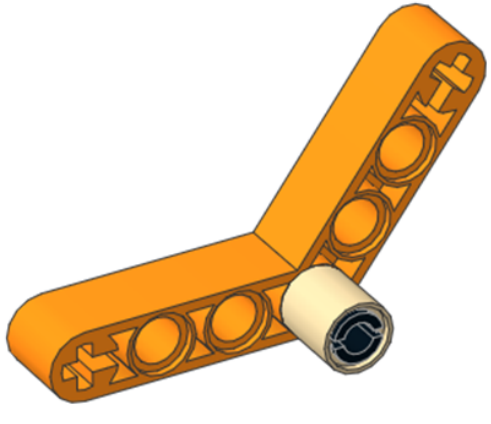

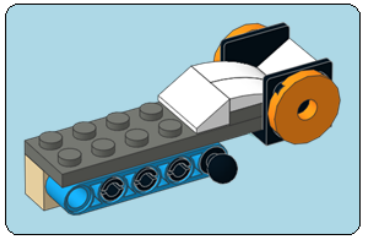

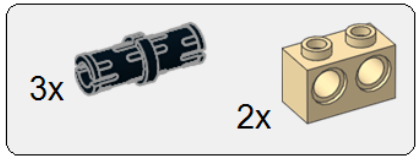

1

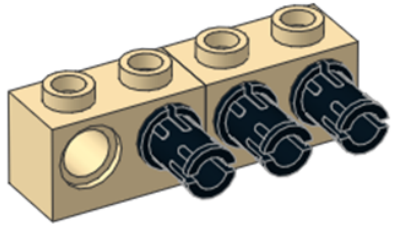

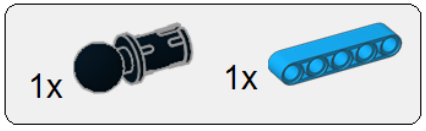

2

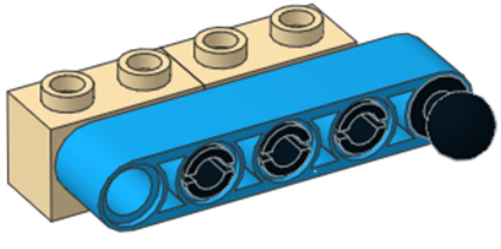

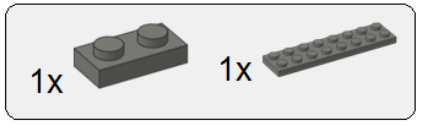

3

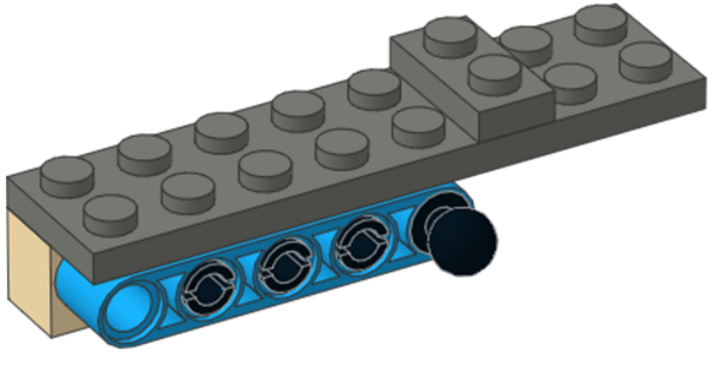

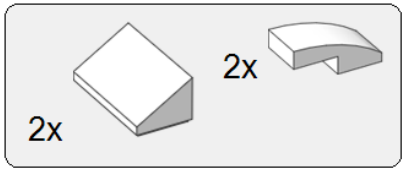

4

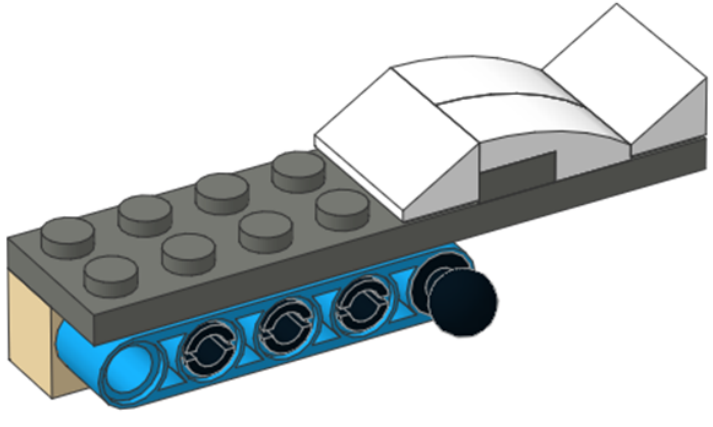

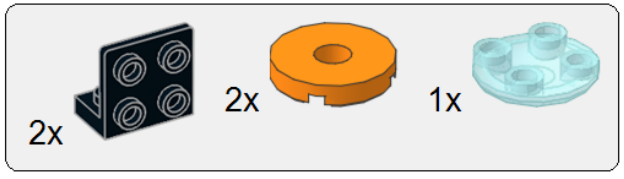

5

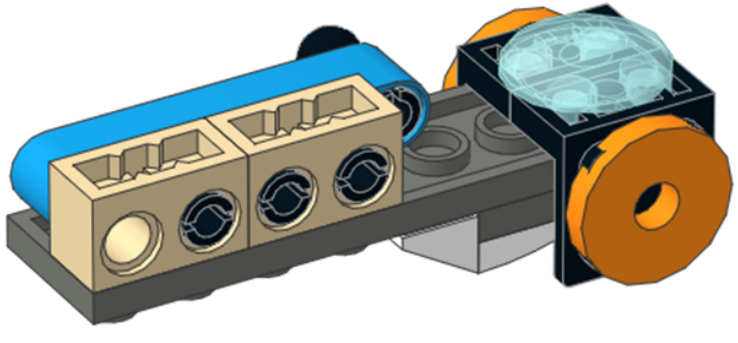

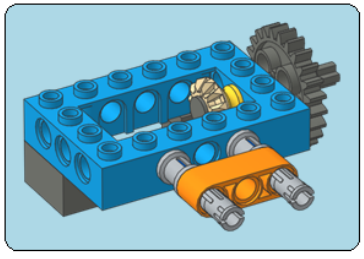

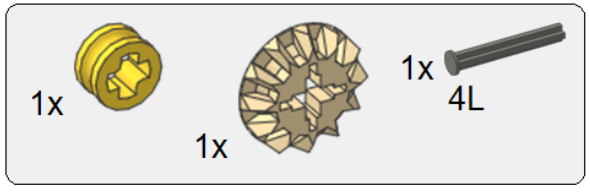

1

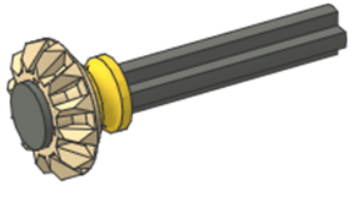

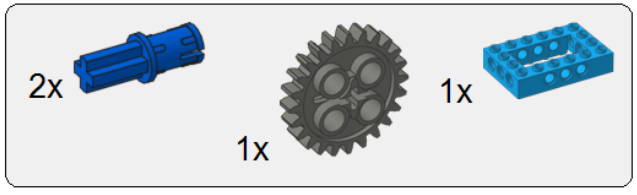

2

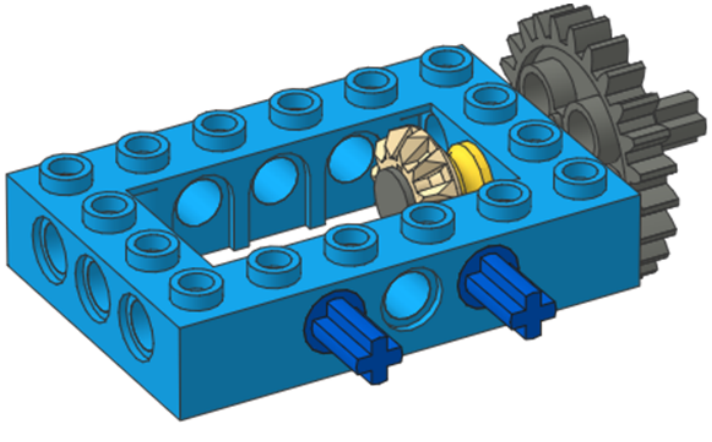

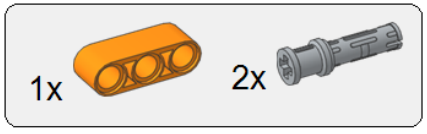

3

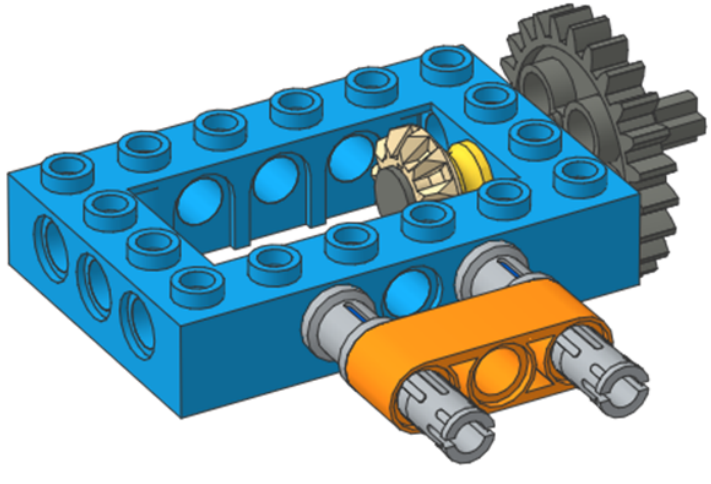

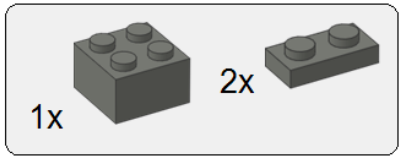

4

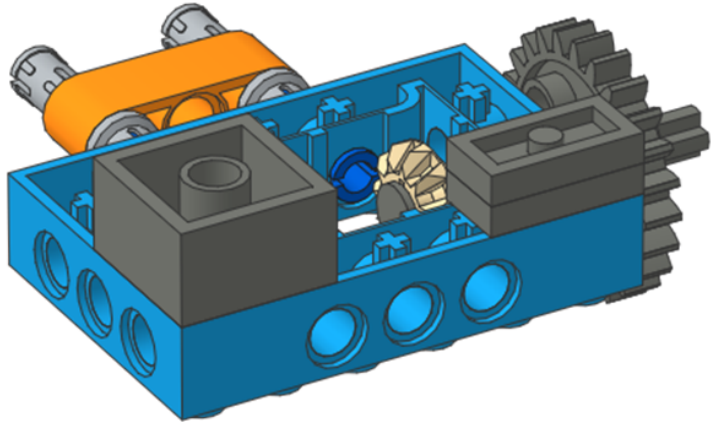

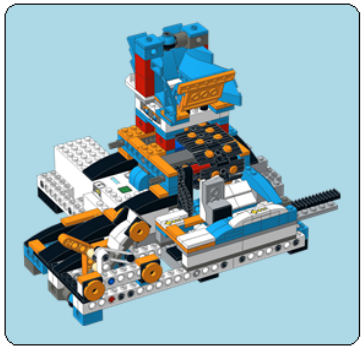

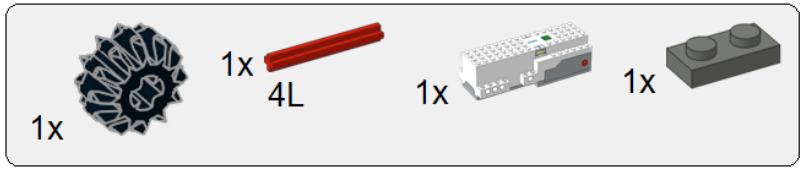

1

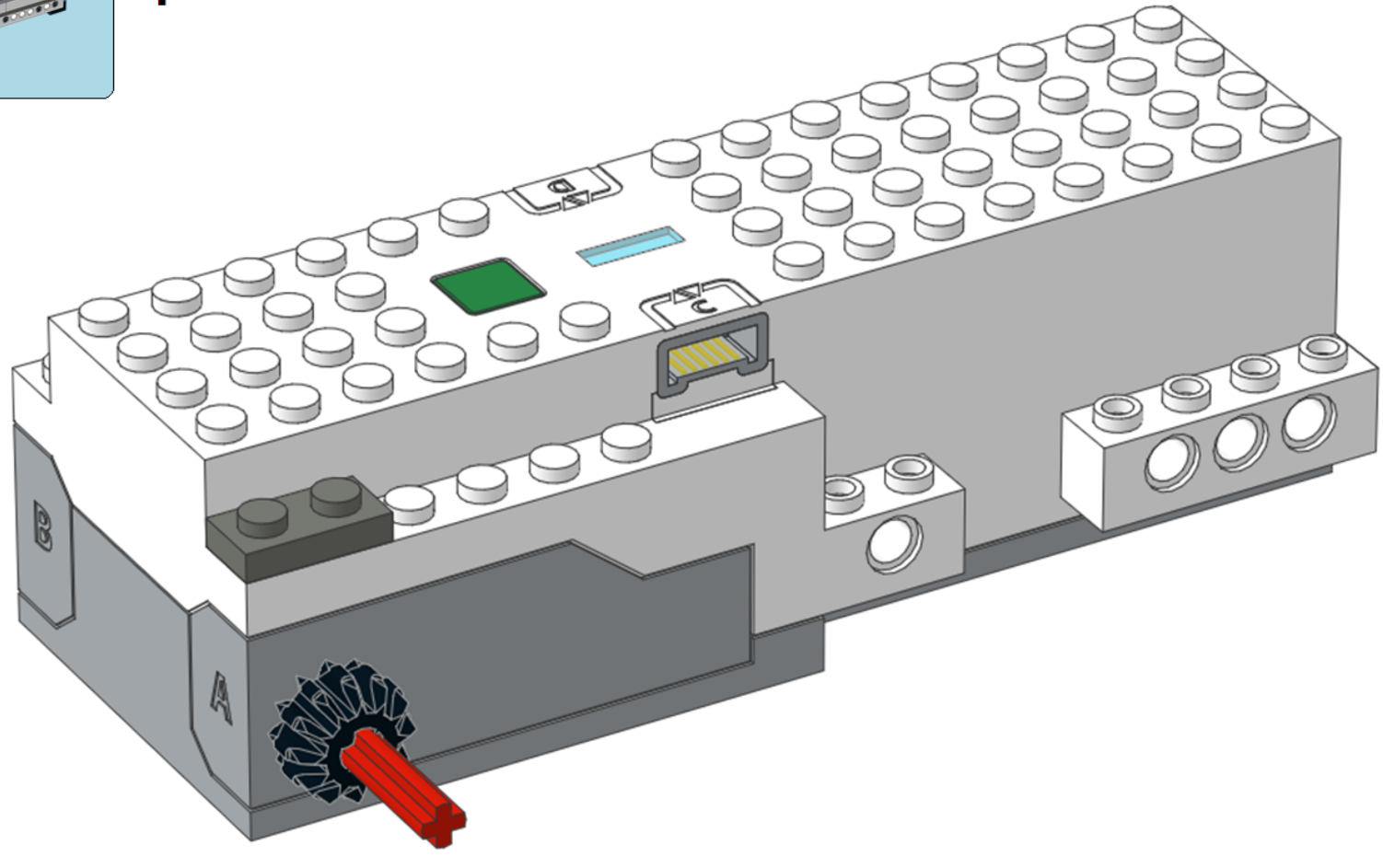

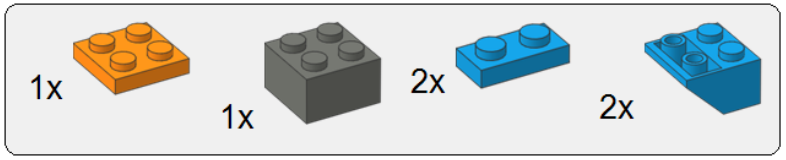

2

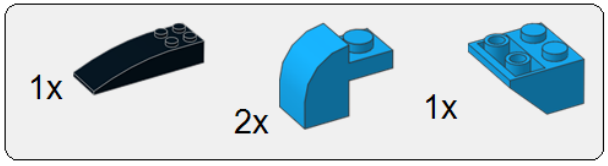

3

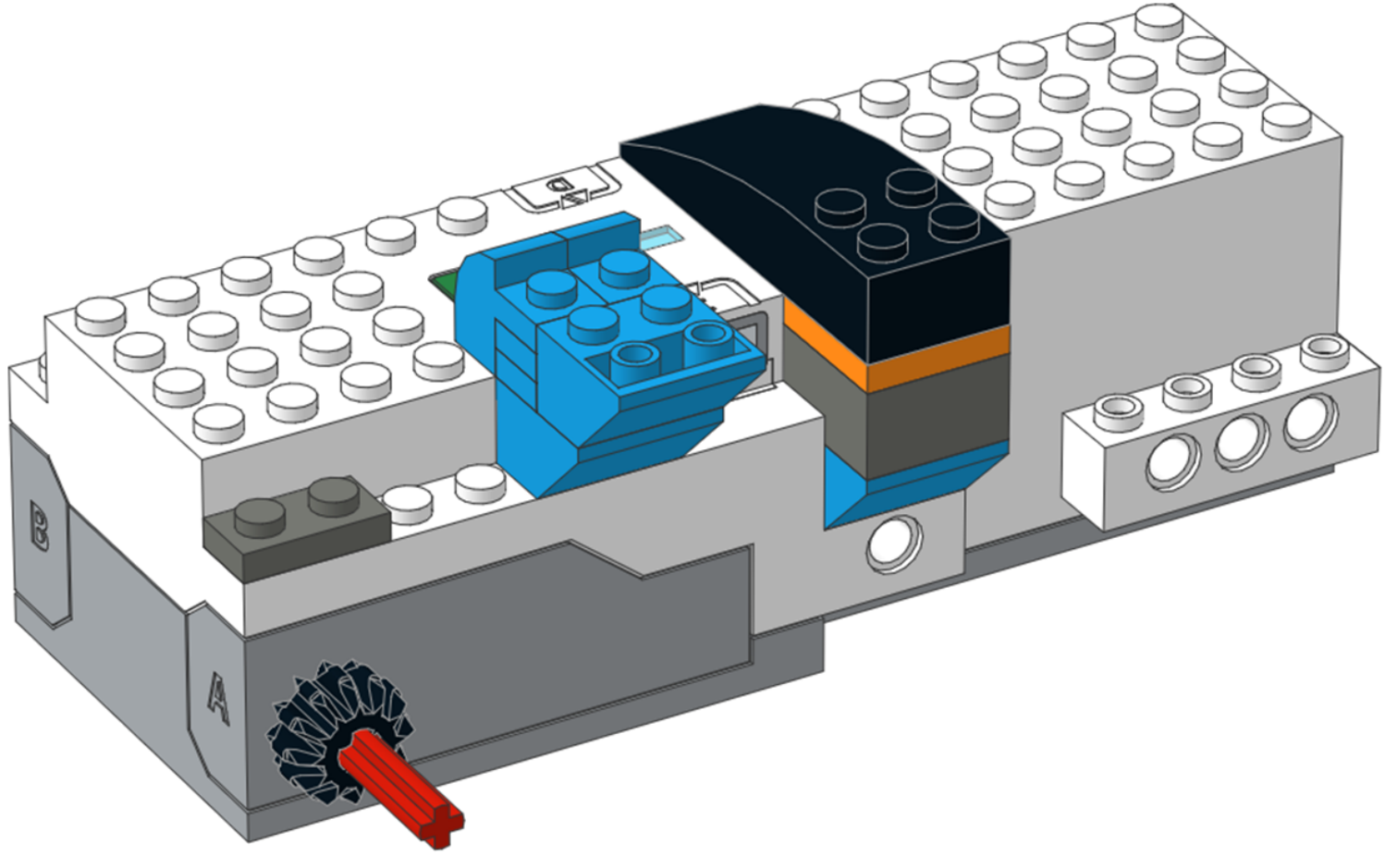

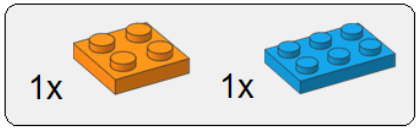

4

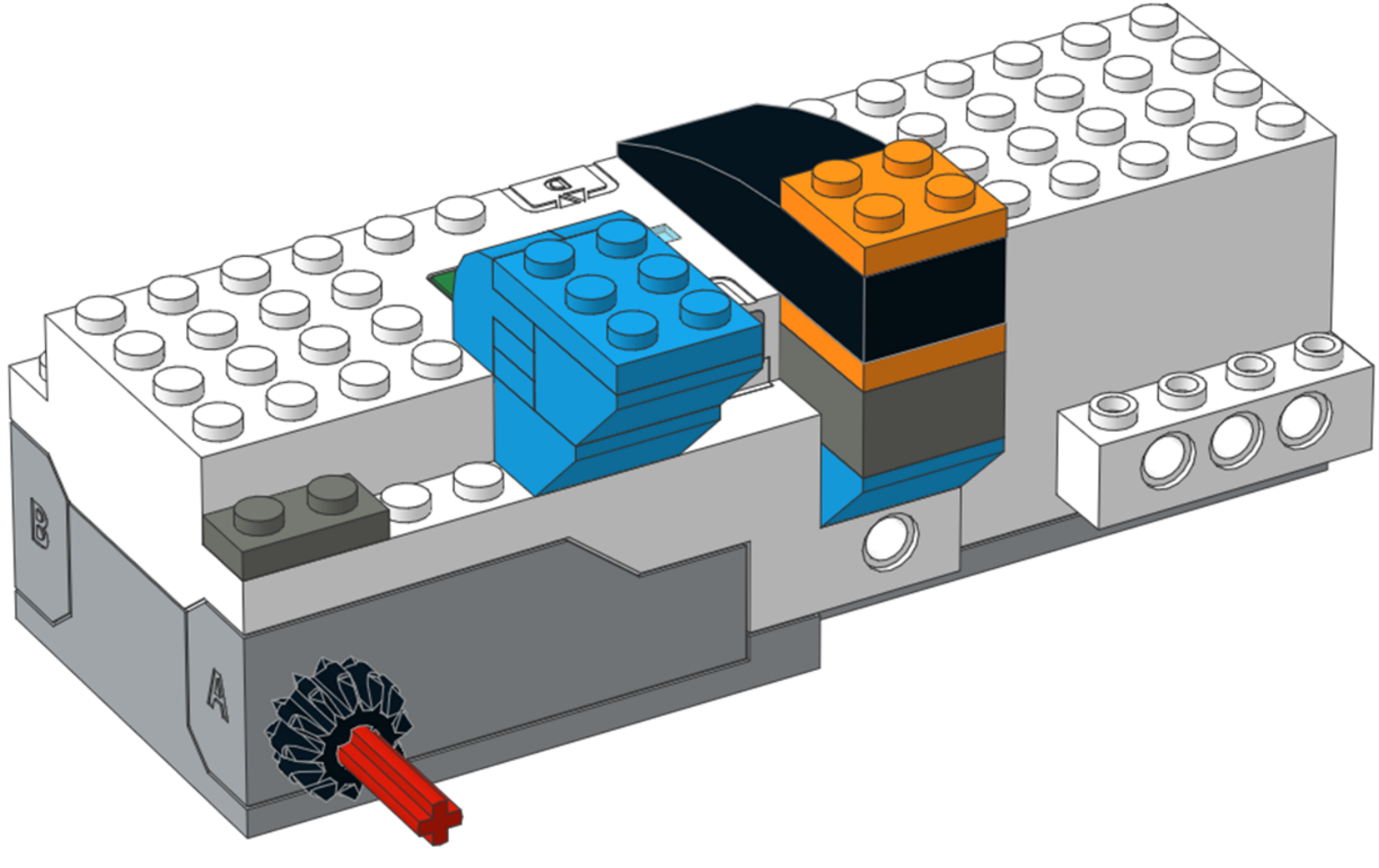

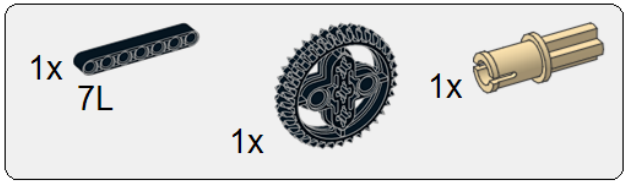

5

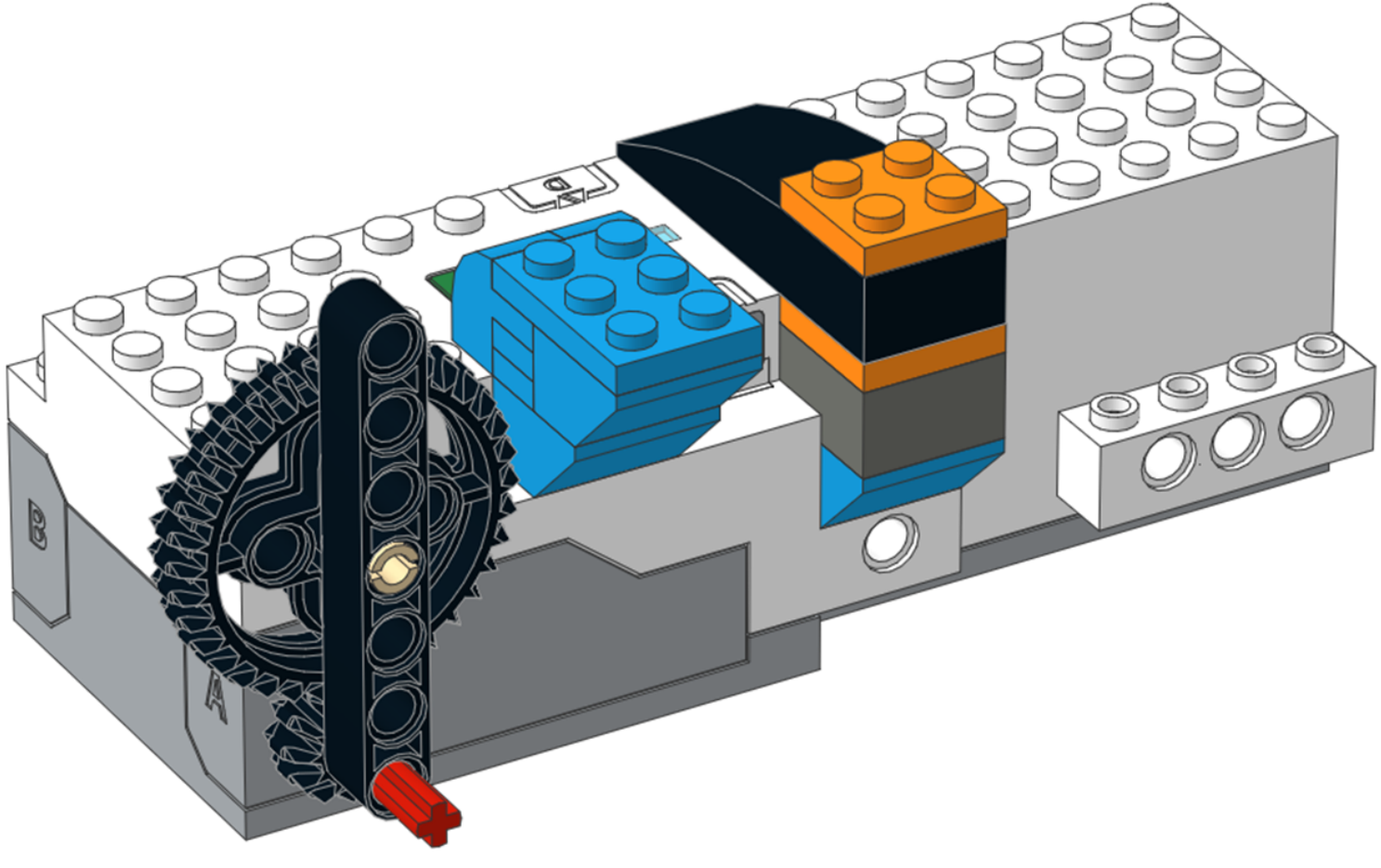

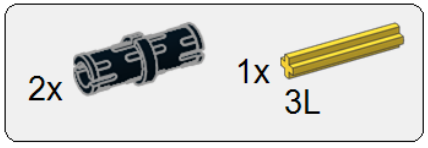

6

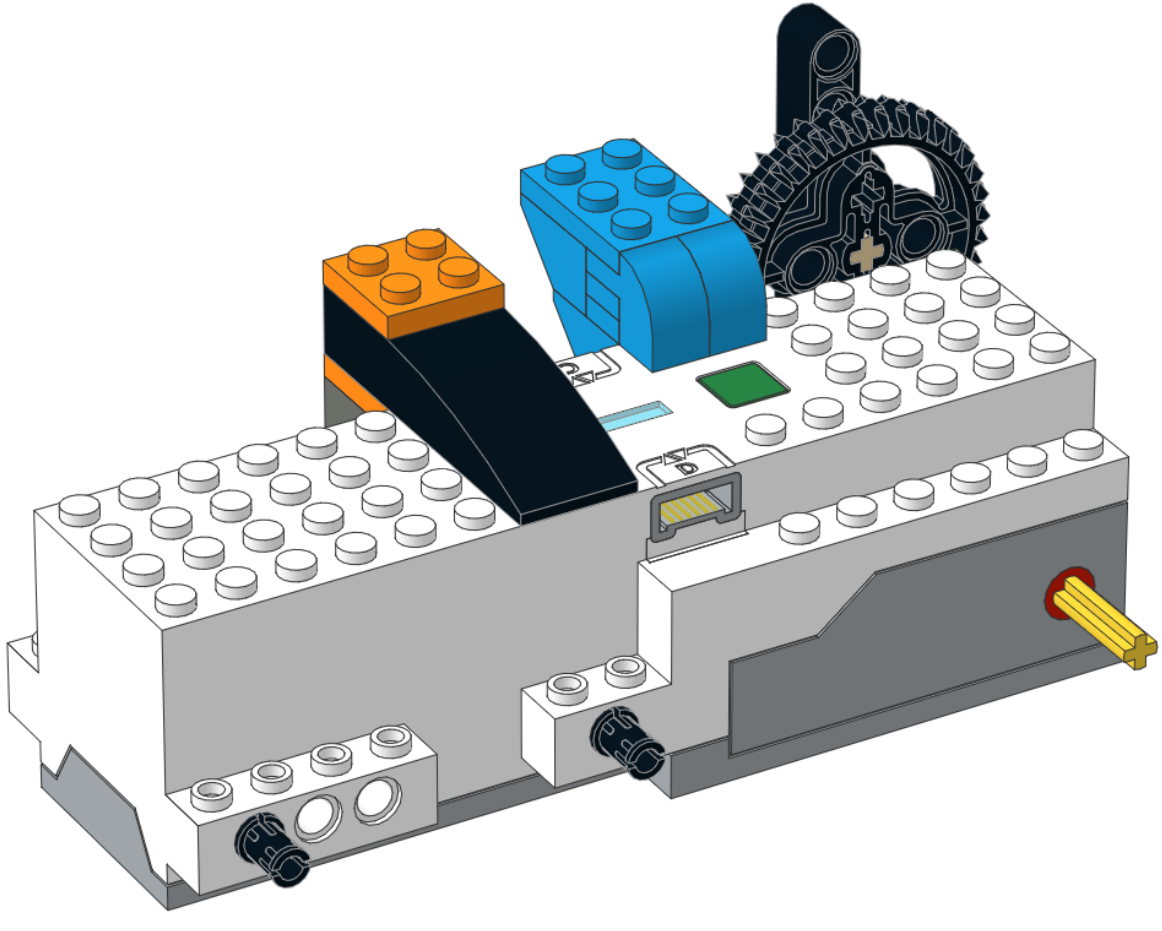

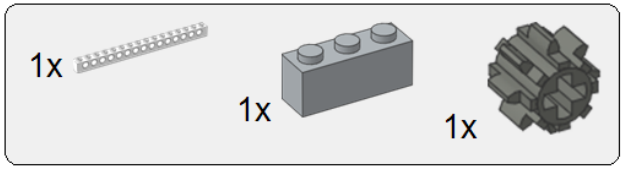

7

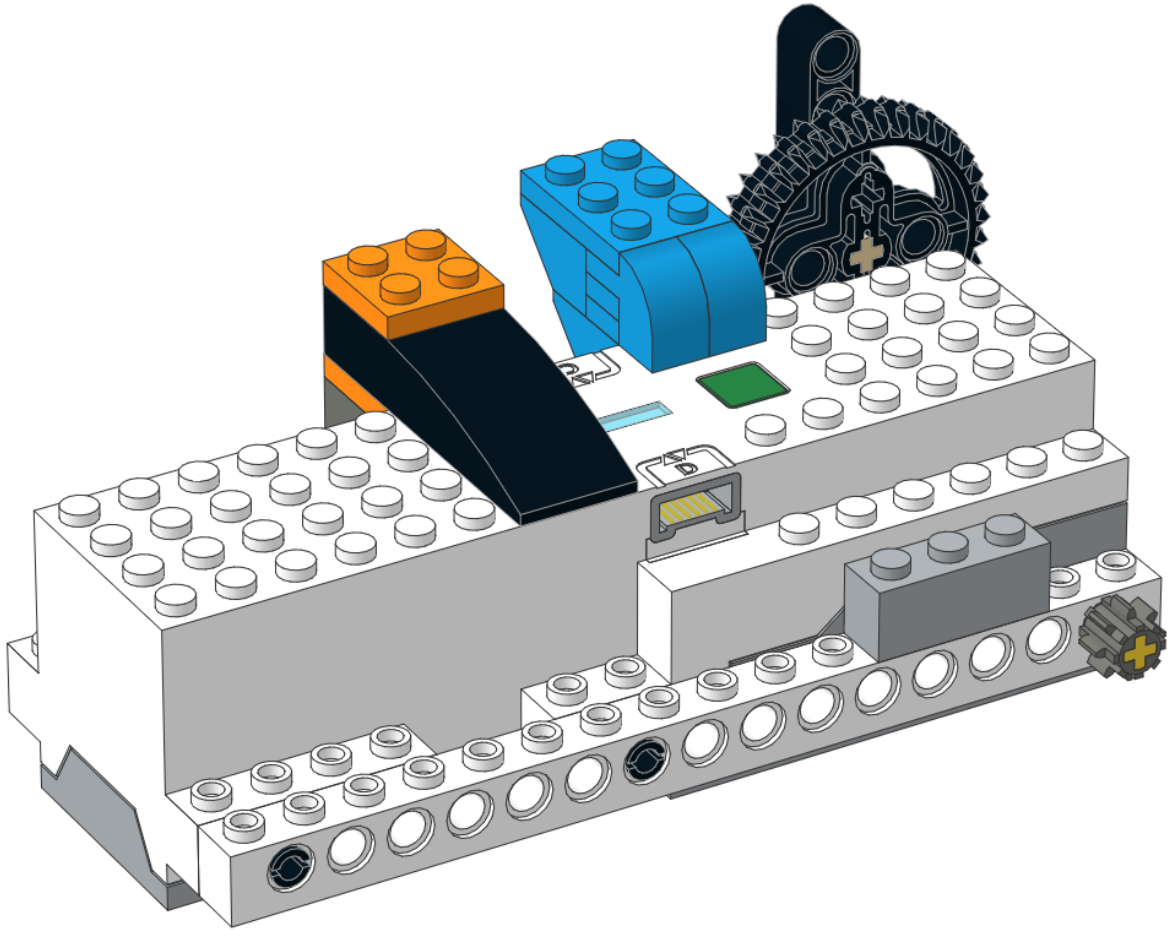

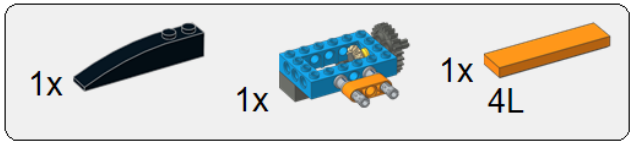

8

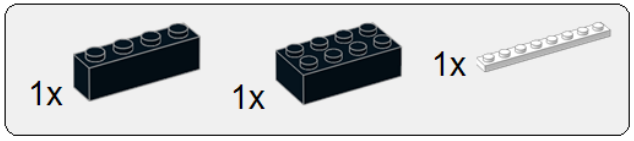

9

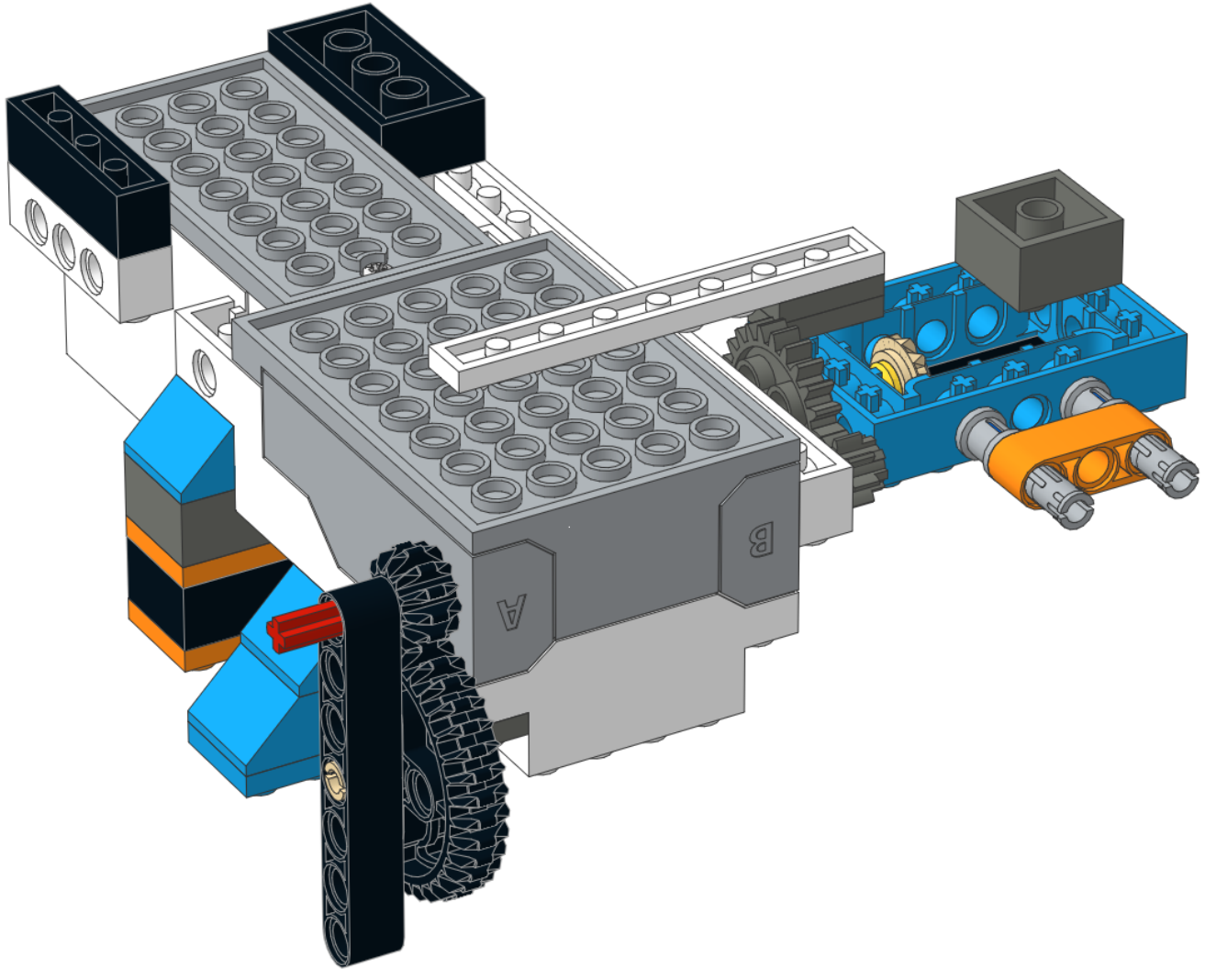

10

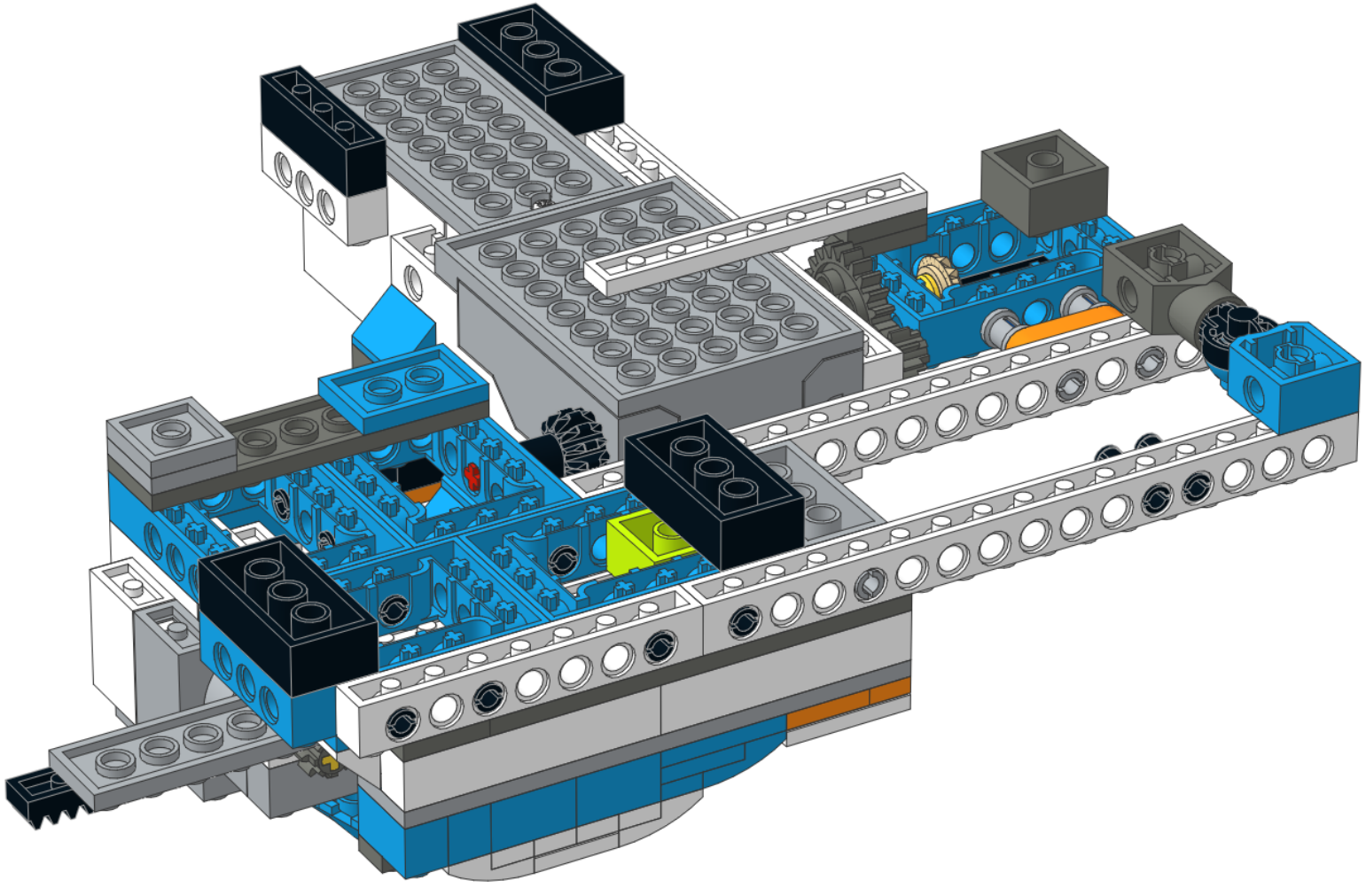

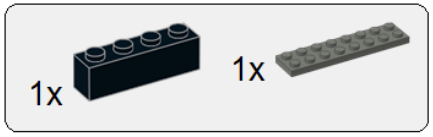

11

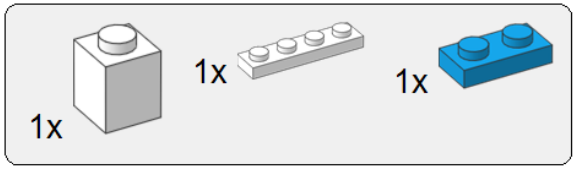

12 Connect motor cable to port C

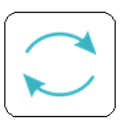

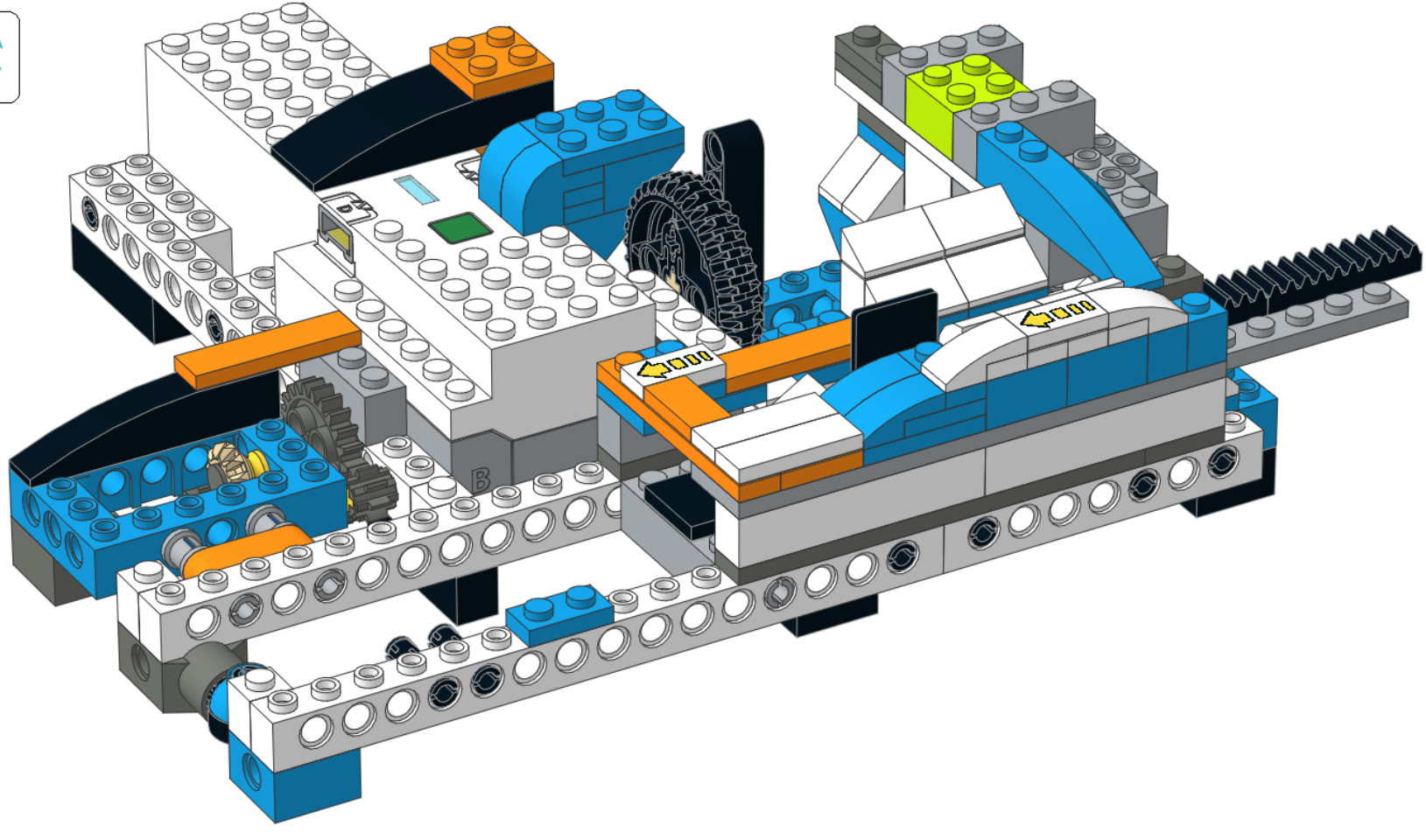

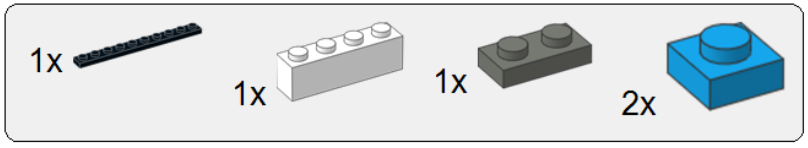

13

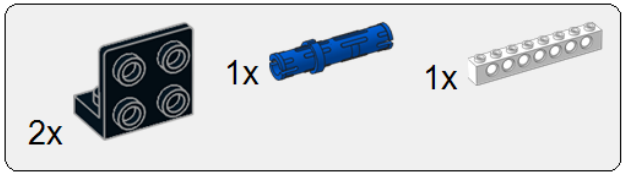

14

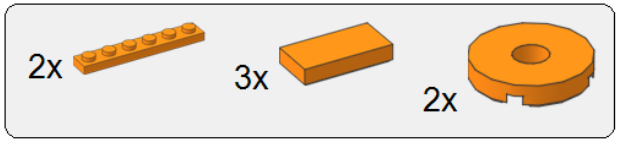

15

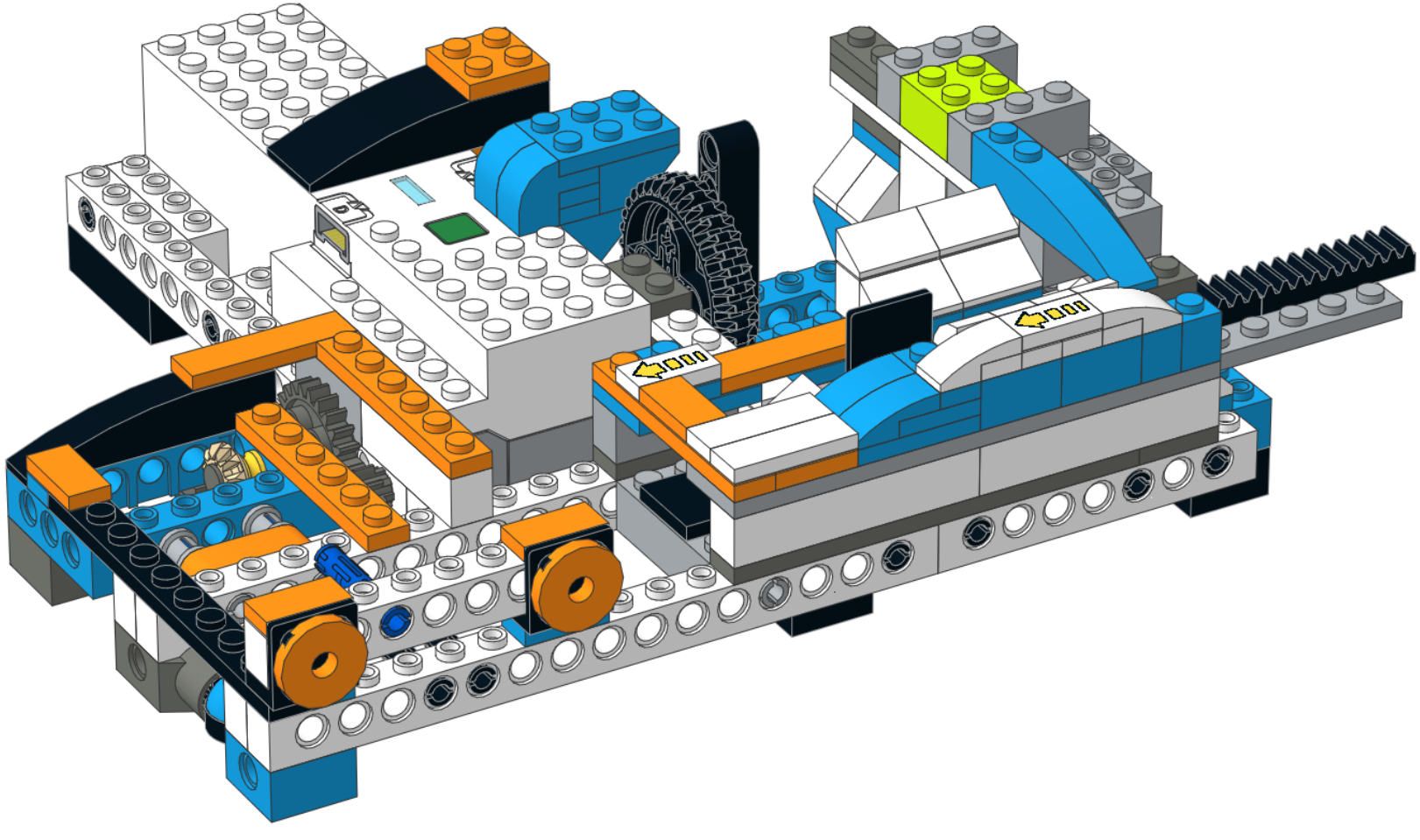

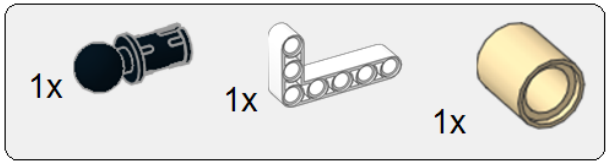

16

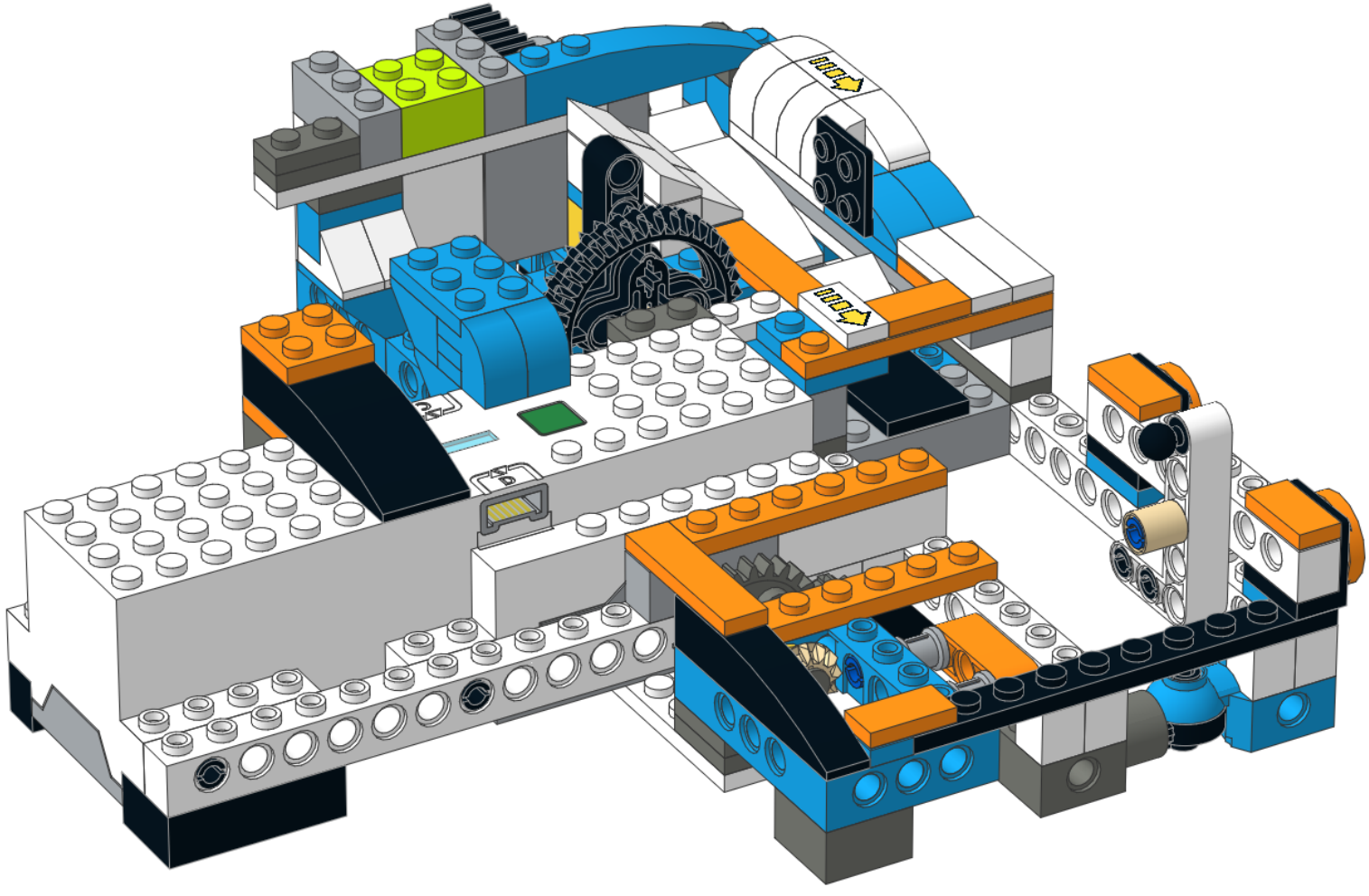

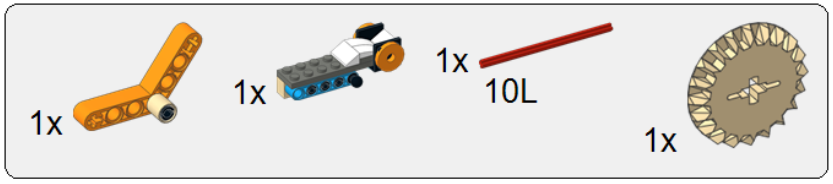

17

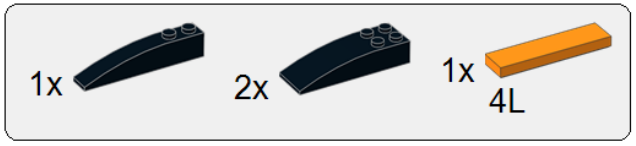

18

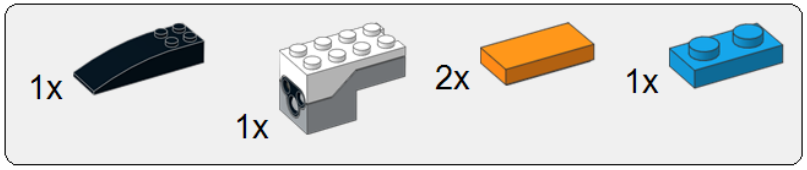

19 Connect light to port D

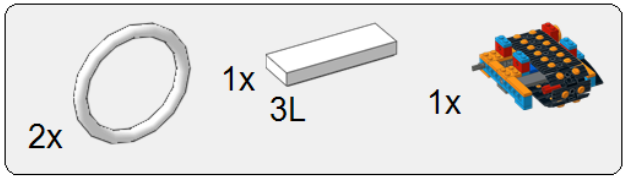

20

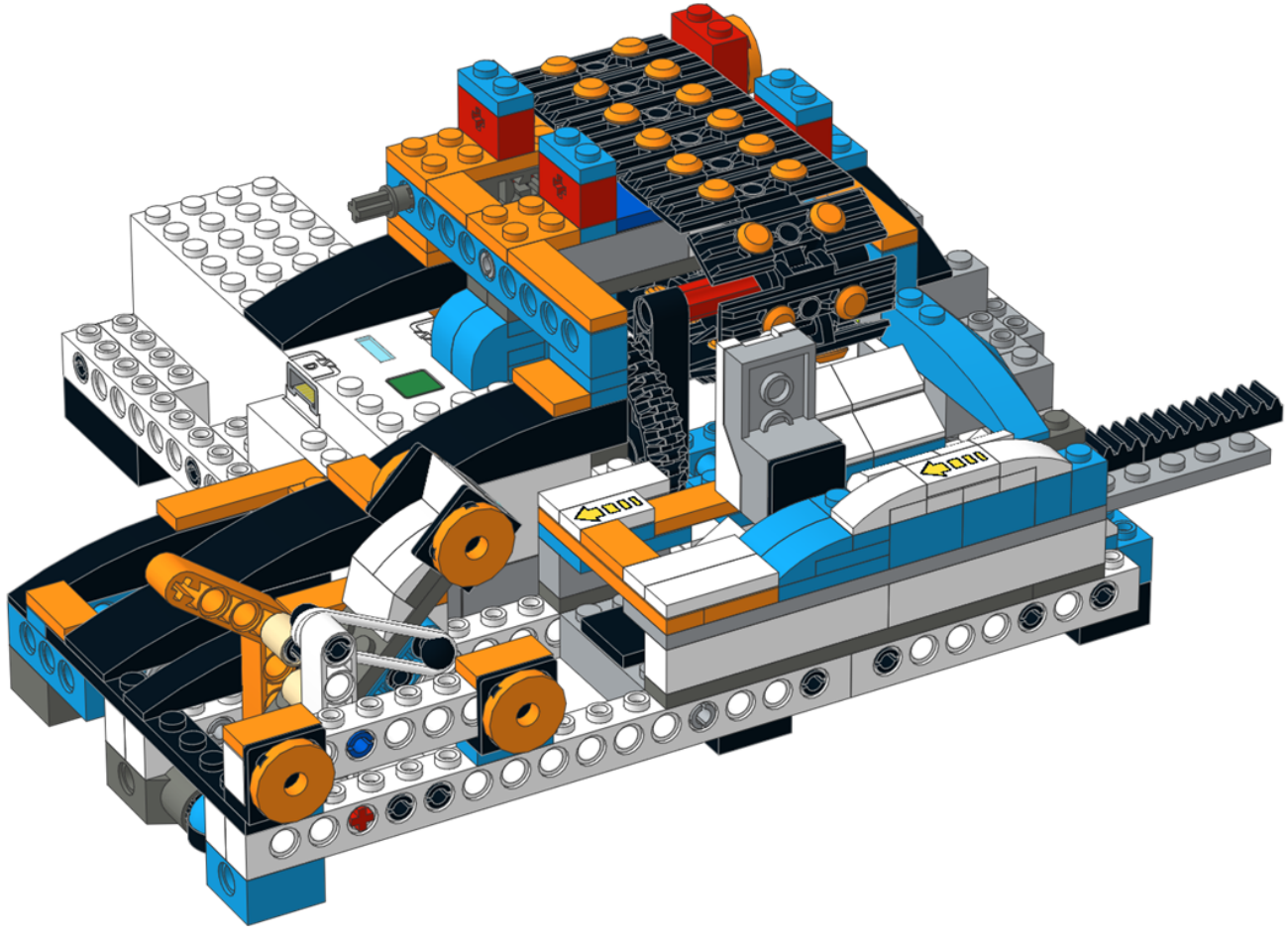

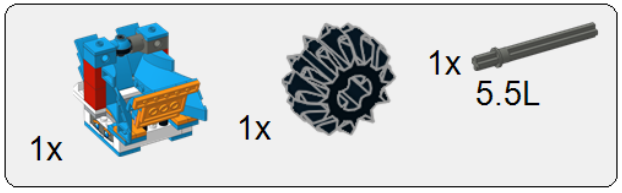

21

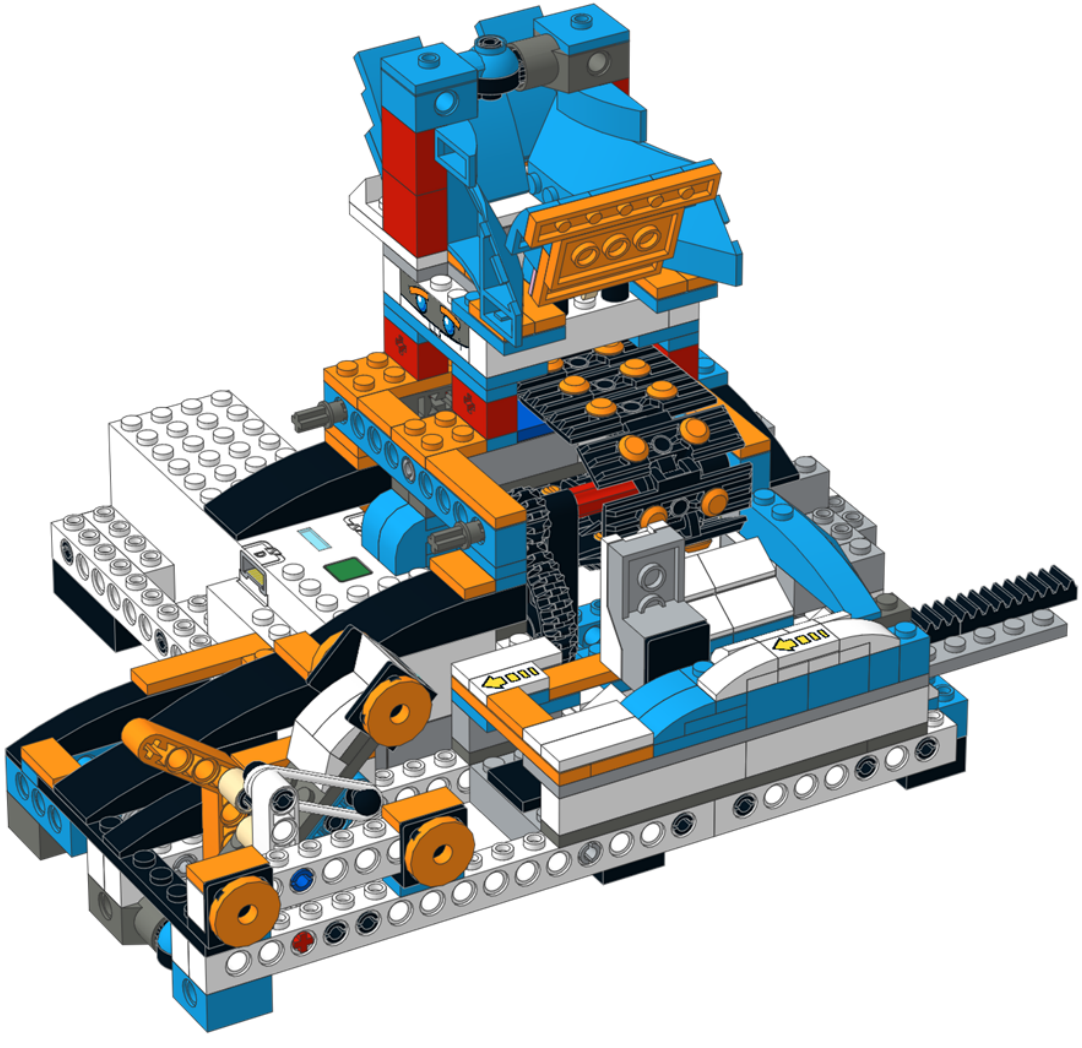

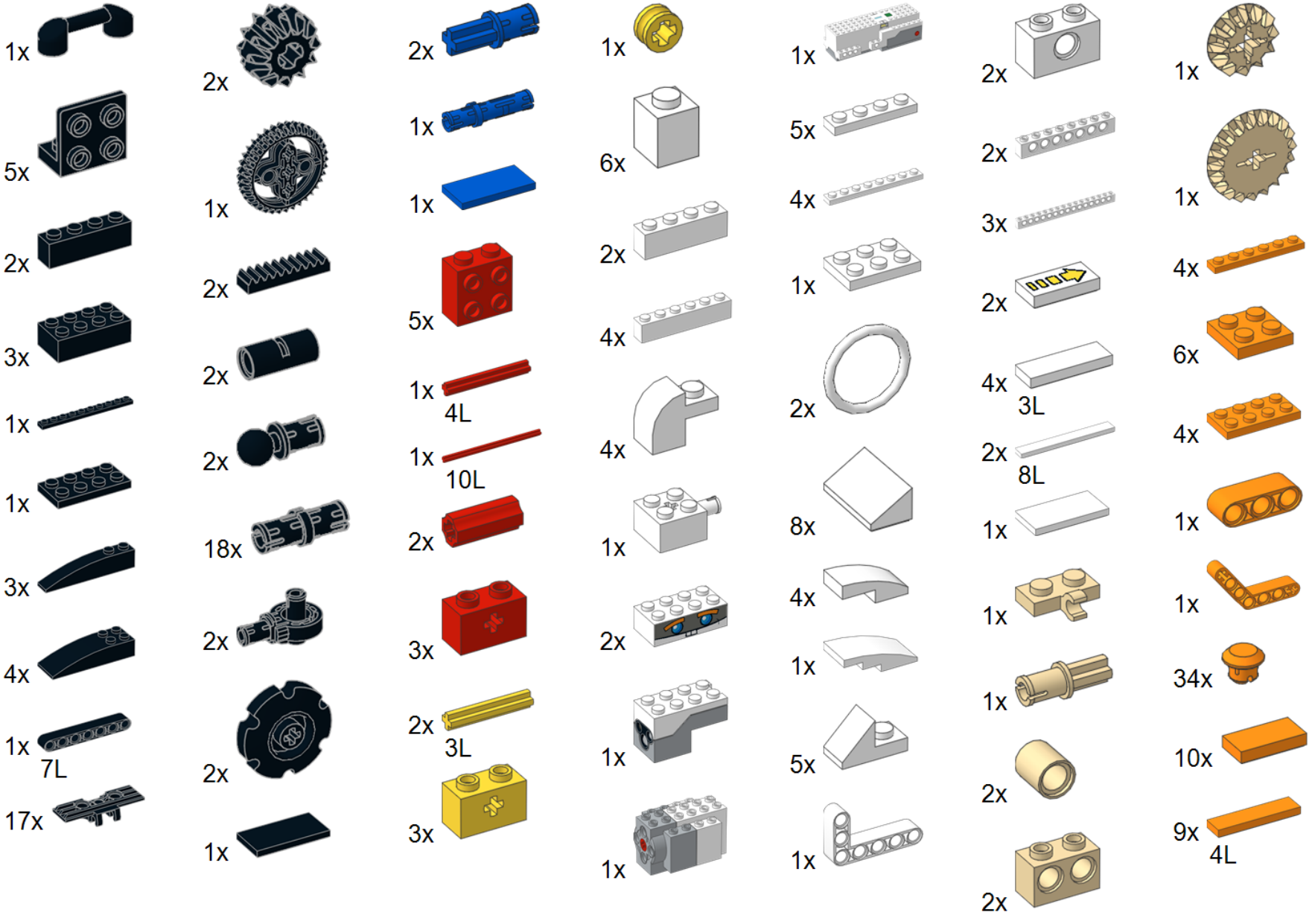
1x
5x
2x
3x
1x
1x
3x
4x
1x
7L
17x
2x
1x
2x
2x
2x
18x
2x
2x
1x
2x
1x
1x
5x
1x
4L
1x
10L
2x
3x
2x
3L
3x
1x
6x
2x
4x
4x
1x
2x
1x
1x
1x
5x
4x
1x
2x
8x
4x
1x
5x
1x
2x
2x
3x
2x
4x
3L
2x
8L
1x
1x
1x
2x
2x
1x
1x
4x
6x
4x
1x
1x
34x
10x
9x
4L

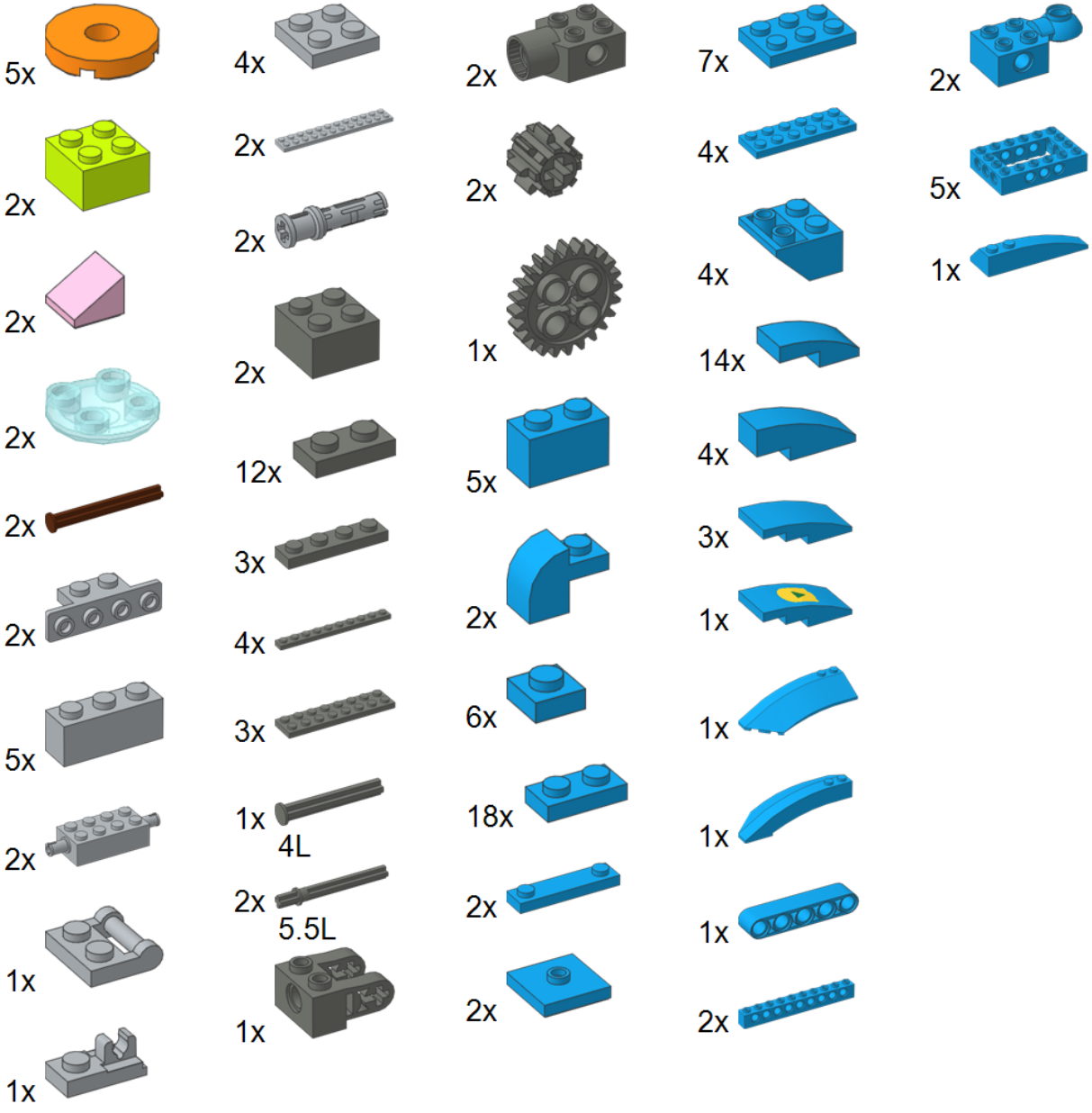
5x
2x
2x
2x
2x
2x
5x
2x
1x
1x
4x
2x
2x
2x
12x
3x
4x
3x
1x
4L
2x
5.5L
1x
2x
1x
2x
2x
1x
5x
2x
6x
18x
2x
2x
7x
4x
4x
14x
4x
3x
1x
1x
1x
1x
2x
2x
5x
1x